Parks, Property and Streets Committee Meeting Agenda

Wednesday, April 6, 2016 at 2:15 P.M.
Sister Bay-Fire Station, 2258 Mill Road
For additional information check: www.sisterbaywi.gov
In order for everyone to hear the discussion please, turn off your cell phone. Thank you.

Call Meeting to Order **Deviations from the agenda order shown may occur.**

Roll Call

1	Chair – Dave Lienau		2	John Clove	
3	Sharon Doersching		4	Scott Baker	
	Village Administrator – Zeke Jackson			*Parks Manager – Steve Mann*	

Comments, correspondence and concerns from the public
Approval of minutes as published
Approval of Agenda
Business Items

1. Presentation by Denise Bhirdo, the Chair of the Waterfront Oversight Committee, regarding the recommendations which have been formulated by that Committee to date; Consider a motion for action if appropriate.
2. Discussion regarding locations for fixed banner posts in the Village; Consider a motion to make a recommendation to the Plan Commission.
3. Review of the Facility Use Application and accompanying documents which have been submitted by Paul Collins, the organizer of Door County Folk Fest; Consider a motion for action if appropriate.
4. Report on the status of the Village-Wide Rummage Sale and the Car Show and turn over to private entities; Consider relevant motions for action if appropriate.
5. Review of the "goat fennial" options for pedestrian wayfinding signage; Consider motions for action if appropriate.
6. Report from Staff on Parks, Properties and Streets activities.
   -Request from the SBAA for a movie Screen
   -Request from the SBAA for a second "portable" volley ball court
6. Consider a motion to convene into closed session pursuant to Wis. Stats., §19.85(1)(e) to deliberate or negotiate the purchase of public properties, the investment of public funds, or conduct other specified public business, whenever competitive or bargaining reasons require a closed session.
7. Consider a motion to reconvene into open session.
8. Consider a motion to take action, if required.
9. Discussion regarding matters to be placed on a future agenda or referred to a committee, official or employee.

Adjournment

Public Notice

Questions regarding the nature of the agenda items or more detail on the agenda items listed above scheduled to be considered by the governmental body listed above can be directed to Zeke Jackson, Village Administrator at 920-854-4118 or at zeke.jackson@sisterbaywi.gov.

It is possible that members of and possibly a quorum of members of other governmental bodies of the municipality may be in attendance at the above-stated meeting to gather information; no action will be taken by any governmental body at the above-stated meeting other than the governmental body specifically referred to above in this notice. Upon reasonable notice, a good faith effort will be made to accommodate the needs of disabled individuals through sign language interpreters or other auxiliary aid at no cost to the individual to participate in public meetings. Due to the difficulty in finding interpreters, requests should be made as far in advance as possible preferably a minimum of 48 hours. For additional information or to request this service, contact the Sister Bay Village Administrator at 854-4118, (FAX) 854-9637, or by writing to the Village Administrator at the Village Administration Building, 2383 Maple Drive, PO Box 769, Sister Bay, WI 54234. Copies of reports and other supporting documentation are available for review at the Village Administration Building during operating hours. (8 a.m. – 4 p.m. weekdays).

I hereby certify that I have posted a copy of this agenda at the following locations:

☐ Administration Building ☐ Library ☐ Post Office

_____ / _____
Name Date

PARKS, PROPERTIES & STREETS COMMITTEE MEETING MINUTES
WEDNESDAY, FEBRUARY 17, 2016
SISTER BAY FIRE STATION – 2258 MILL ROAD
(APPROVAL PENDING)

The February 17, 2016 meeting of the Parks, Properties and Streets Committee was called to order by Committee Chair Dave Lienau at 2:20 P.M.

Present: Committee Chair Dave Lienau and members John Clove, Sharon Doersching and Scott Baker.

Staff Members: Village Administrator Zeke Jackson, Ice Rink Manager Joe Baldarotta, Facilities Manager Steve Mann, and Assistant Administrator Janal Suppanz.

Others: Ron Kane, Drew Bickford, Kathy Enquist, Rob Zoschke, John Mory, Julie Duffy and one other individual.

Approval of Agenda:
A motion was made by Baker, seconded by Clove that the Agenda for the February 17, 2016 meeting of the Parks Committee be approved as presented. Motion carried – All ayes.

Approval of Minutes as published:
A motion was made by Clove, seconded by Baker that the minutes for the December 2, 2015 meeting of the Parks Committee be approved as presented. Motion carried – All ayes.

Comments, correspondence and concerns from the public:
Lienau noted that letters from Kathy Enquist and Karen McRoberts were included in the meeting packets. Those letters pertain to the fact that the Village does not allow dogs in its parks, and copies of them are attached and incorporated by reference. Lieanu then asked if anyone else wished to comment regarding a non-agenda item.

Kathy Enquist stated that she believes the Village residents who own dogs should be setting a good example for other dog owners by having their dogs on a leash at all times and picking up after them. She also believes information about the dog park and the fact that dog owners should be responsible should be included in the informational letter which is mailed with the tax bills. It might help if "mutt mitts" and receptacles were available on a year-round basis. A community-wide "poop pick-up day" could also be conducted by a Dog Owner's Group after festivals and special events. Enquist suggested that signs be erected which say "Dogs Must Be Leashed" and "Please Pick Up After Your Pets".

Drew Bickford stated that he owns a dog and is a Village resident. Many people consider dogs to be members of their family and will leave an event if they see "No Dogs Allowed" signs.

Rob Zoschke stated that he believes Village officials must be concerned about e-coli contamination on the beaches. If dogs are allowed the possibility of contamination could increase.

Lienau responded that he has a dog and would love to walk her on the beach and in the park, but it is his understanding that the "No Dogs In The Park" signs were erected in the first place because Village officials wanted to make a concerted effort to keep the Village's beach clean and free from e-coli contamination. He suggested that this issue be referred to the Waterfront Oversight Committee, and the other Committee members concurred.

Business Items:

Item No. 1. Report from Joe Baldarotta, the Ice Rink Manager; Discussion on Baldarotta's report and consider appropriate motions for action:

Joe Baldarotta, the Ice Rink Manager, indicated that it has been a good year at the ice rink in spite of the warm weather, but they have had problems maintaining ice. (Ice has had to be brought back from bare concrete five times.) A good friend of his is a cement contractor. He recently went to a seminar and told the instructor about the issues Baldarotta was having with making ice last at the rink, and the instructor indicated that this problem is common with concrete ice rinks as the water will seep through the concrete. Pitch issues will also come into play. It might help if the pitch were to be eliminated. Baldarotta was asked if he was aware of any other alternative ice rink surfaces, and he responded that a liner or pea gravel overlay might help. Baldarotta has heard a number of people say, "It is what it is", but he does not believe that has to be the case. He will contact the managers of other outdoor ice rinks to see what they would suggest, and will report his findings to Jackson ASAP.

Baldarotta also reported that the Village's sledding hill has been well accepted and is getting a lot of use.

Item No. 2. Discussion regarding the Facility Use Application which was submitted by the organizers of the Door County Century Bike Ride; Consider a motion for action if necessary:

A packet of information which was received from John Mory, the Director of the Door County Century Bike Ride, was included in the meeting packets and the Committee members jointly reviewed that documentation. This year's ride will be conducted on Sunday, September 11, 2016, and if Mory's request is approved Waterfront Park will be utilized as a rest area. A tent will be erected on the afternoon of September 10, 2016 and it will be taken down on the morning of September 12, 2016.

Mory was present and indicated that approximately 1,700 bicyclists come to Sister Bay for the Door County Century Bike Ride. This year they would like to get more of a police presence during the ride and will again attempt to see that local non-profits, including Gibraltar School, are involved.

A motion was made by Clove, seconded by Baker that the Parks Committee grants permission for the organizers of the Door County Century Bike Ride to utilize Waterfront Park from the afternoon of Friday, September 10, 2016 through the morning of Monday, September 12, 2016, and, to that end, a tent may be erected in Waterfront Park. Permission is also granted for riders to utilize the Village streets which are delineated on the route map which was included in the meeting packets, and route signs may be placed along those streets. Before the tent is erected ride organizers must meet with the Village's Facilities Manager, Steve Mann to determine the designated tent location. Motion carried – All ayes.

Item No. 4. Discussion regarding the SBAA's Park and Facility Use Requests for 2016; Consider a motion for action if necessary:
A lists of events the SBAA would like to sponsor and host in 2016 was included in the meeting packets and the Committee members jointly reviewed that documentation. Drew Bickford pointed out that a local person will be getting married on June 18, 2016 and a number of Northern Door residents have been invited to the wedding and reception. Therefore, the SBAA is suggesting that the date for Paddlefest and The Beach Grand Opening Celebration be changed to June 25, 2016.

The SBAA will once again be hosting the Plein Air tented event. Ginny Sowinski, a representative of the Peninsula School of Art, was present and noted that they would like to conduct the tented event in Waterfront Park on July 30, 2016. That event typically draws approximately 1,000 participants, but there are many more spectators. The Visitor Bureau estimates that there are approximately 5,000 to 6,000 people who come to watch the painters. It would help if the people from Peninsula School of Art would not have to deal with garbage pick-up. It would also help if there would be some way for officials from the School of Art to access the Performance Pavilion stage for the art auction, but if that occurs the tent would have to be placed outside the designated area. Mann responded that because of the location of underground lines this could be a major issue. Jackson responded that it wouldn't be a problem for the School of Art to utilize the Village's portable sound system. Discussion took place regarding the possibility of utilizing a frame tent which is anchored with barrels rather than posts for the Plein Air tented event, and the possibility of closing off Mill Road for that event, and it was eventually the consensus that Mill Road shall be closed on July 30, 2016. Sowinski was asked to investigate the type of frame tents which are available and will provide that information to Jackson, who will see that it is forwarded on to the Committee members ASAP.

A motion was made by Clove, seconded by Baker that the Parks Committee grants permission for the Sister Bay Advancement Association to utilize the Village facilities and parklands which are mentioned on the documentation which was reviewed at this meeting. A copy of that documentation is hereby attached and incorporated by reference. Motion carried – All ayes.

A motion was made by Lienau, seconded by Clove that the use fee for the Plein Air tented event is waived, but the Peninsula School of Art will be required to post a refundable security deposit of $500 at least one month prior to that event. Motion carried – All ayes.

Item No. 3. Discussion regarding a sign proposal which was submitted by the Sister Bay Bays; Consider a motion for action if necessary:
An artist's rendering of a sign the Sister Bay Bay's would like to erect at the Sports Complex was included in the meeting packets and the Committee members jointly reviewed that document. The Plan Commission has already approved of the sign and recommended that the Parks Committee do the same.

A motion was made by Doersching, seconded by Clove that the Parks Committee grants permission for the Sister Bay Bays to see that the sign depicted on the documentation which was included in the meeting packets is created. The Parks Department employees will see that the sign is erected at the Sports Complex, but the Bays must pay for the materials. Motion carried – All ayes.

Item No. 5. Discussion on Village sponsored events for 2016; Discussion regarding creation of a grant program to facilitate events in the Village for 2016; Consider a motion for action if necessary:
Last year a number of Village sponsored events were conducted in an attempt to draw people to the Village during the construction period. This year the funding for those activities was cut and a staff person's job was eliminated. The Village previously sponsored the Rummage Sale, the Car Show, a New Year's Eve Fireworks display and Movies In The Park, but this year $6,000 has only been budgeted for special events. Jackson would again like to conduct the New Year's Eve fireworks display, and there are some organizations who have expressed interest in conducting Movies In The Park if a permanent screen is made available at the Performance Pavilion. Charlie Hendriksen has expressed some interest in conducting the Car Show at the Country Walk Shops, and Jeff Bakke has informed Suppanz that he would be willing to help organize this year's show.

Doersching stated that she will talk with Denise Bhirdo and see if she would again be willing to help her organize the Rummage Sale. If Doersching and Bhirdo resume those duties they would still need limited help with printing and distributing maps and other documents related to the sale from Village staff members. She will report her findings to Suppanz ASAP.

It was the consensus that Charlie Hendriksen and Jeff Bakke shall be asked if they would be willing to take over the Car Show. It was also the consensus that the possibility of installing a screen on the back wall of the Performance Pavilion shall be addressed at the next meeting of the Parks Committee.

Item No. 7. Report from staff on parks, properties and streets activities:
Mann gave the following oral report:

- Denise Bhirdo called him today and asked where the new sand volleyball net will be located as they would like to conduct a volleyball tournament during the Beach Grand Opening Celebration.

  It was the consensus that measurements shall be taken on the beach and Bhirdo shall be advised of the preferred location(s) for a volleyball net(s) ASAP.

- The new gun safe at the Village Hall is nearly complete and came in under budget.

- The Parks Department employees have been doing quite a bit of cleaning at the shop and are completing a lot of organizational tasks.

- "Brushing" was done in December from Maple Drive south.

- The Ice Out Contest buoy was placed today.

- The truck bed on the 2000 F350 dump truck bed is rusted through. A steel plate has been ordered and the truck bed should be repaired soon.

Jackson also gave the following oral report:

- Julie Duffy approached him about the possibility of installing a scoreboard at the Little League Field and has gotten commitments from the Lions and the Bays to

help pay for the scoreboard.

Duffy was present and confirmed that she has contacted representatives of the Sister Bay Lions and The Bays. They have agreed to help fund the purchase and installation of a scoreboard for the Little League Field. Duffy distributed copies of estimates which were received for the cost of the scoreboard, and asked if the Village would be willing to split the cost of that appurtenance with the Lions and the Bays.

A motion was made by Doersching, seconded by Clove that the Parks Committee agrees to pay 1/3 of the cost of the scoreboard which is depicted on the documentation presented by Julie Duffy and will see that the scoreboard is installed by Parks Department employees. The funds for the Village's share of the cost of the scoreboard shall be withdrawn from the Unassigned Fund Balance. Motion carried – All ayes.

- The new street lights contain a wreath hook, double banner bars and a flag pole holder. Jackson is suggesting that the Parks Committee members think about what they would like to see displayed on the poles. It might be advisable to ask the SBAA Board of Directors that same question.

Item No. 6. Discussion on creation of a photo cutout as a fundraiser for the Sister Bay Mural Project and discussion regarding the Marina Committee's concerns about that project; Consider a motion for action if necessary:

Drawings of potential murals which were prepared by Ram Rohas were included in the meeting packets, and the Committee members jointly reviewed them. The drawings have already been presented to the Marina Committee members, and they referred this issue to the Parks Committee as they do not believe any of the drawings are what they originally envisioned for display in Sister Bay. They also expressed concerns about what would happen with the mural if structural alterations are ever made to the Boathouse.

One fundraising option which has been suggested for the mural project is creation of a photo cutout(s) to be placed downtown with a donation box. The Maintenance Department employees could create the cut-out and Ram Rohas could be asked to paint it. Discussion took place regarding this suggestion and the Committee members indicated that they do not believe it would work well at all as a number of logistical issues could arise.

Doersching indicated that other than out at the Corner of the Past she does not believe there is an appropriate public building for the mural to be placed on in the Village.

Lengthy discussion took place regarding this issue and it was eventually the consensus that a referral should not be made to the Parks Committee regarding the mural project unless and until sufficient funds have been raised for that project, and the Marina Committee has agreed upon an acceptable mural design.

Item No. 8. Discussion regarding matters to be placed on a future agenda or referred to a committee, official or employee:

It was the consensus that the following issues shall be placed on a future agenda or referred to a committee, official or employee:

- *The Dogs In The Park issue shall be referred to the Waterfront Oversight Committee.*

- *The possibility of installing a screen on the back wall of the Performance Pavilion shall be addressed at the next meeting of the Parks Committee.*

The next meeting of the Parks Committee was scheduled for Wednesday, March 9, 2016 at 2:15 P.M.

Adjournment:
A motion was made by Clove, seconded by Baker to adjourn the February 17, 2016 meeting of the Parks Committee at 4:40 P.M.

Motion carried – All ayes.

Respectfully submitted,

Janal Suppanz,
Assistant Administrator

Kathy D. Enquist
10592 Country Walk Dr.,
Sister Bay WI 54234
920-421-0020

December 1, 2015

To Sister Bay Parks Committee,

Please consider allowing dogs in the waterfront park. As the owner of Dogma Diggs and Grooming Studio I can say 99% of owners leash and pick up after their dogs. I feel responsible dog owners should not be punished for the minority. As a Sister Bay business and dog owner I have no trouble bringing a poop bag to someone who has not cleaned up after their dog. The more people and dogs around the easier it will be to enforce the leash and waste ordinances already in place in the village. Making bags and rules available will also enforce the law.

My dog is a American Kennel Club Good Citizen and Therapy Dog. He needs to be exposed to many situations and be part of society to maintain and practice his manners –not banned to the dog park. Like most people who include their dogs in all family activities and travel, I don't take my dog to the beach to poop! We have a proper place and time to take care of bathroom routine. We are always prepared for emergencies though!

An activity that my dog and I enjoy are walking from home to the Marina. We would love to be able to walk on the beautiful walkway at the beach and take in the view. We also paddleboard together. Launching from the beach is ideal but I feel I am breaking the rules if I walk him from my car to the paddle board.

Having an organized village wide clean up day is an idea I have seen work in other places. It could be group of dog owners, or sponsored by a business or dog park. I would be a business that would sponser a group of responsible dog owners to help keep the park and the village poop free! Having a group of responsible dog owners present in the park will help keep the leash and waste pick up rules enforced.

Thank-you,
Kathy Enquist

January 28, 2016

To the Sister Bay Parks & Recreation Committee,

Please allow me to address concerns that have been raised in previous meetings regarding dogs being allowed in Sister Bay's waterfront park. Because I am unable to attend the Feb. meeting I have asked Drew Bickford to represent me and read this letter.

It is my understanding that dogs were originally banned from the park to eliminate beach closings secondary to E. coli. contamination. It is unfair to blame beach closings on dog feces as there are many significant factors which promote contamination (rainfall, temperature, wind direction, wave height, barometric pressure). The May 2006 Door County Beach Contamination Source Study states the following:

> *The antibiotic resistance testing and the genetic fingerprinting of E. coli isolates collected in 2004 and 2005 from Sister Bay beach indicate that E. coli isolates are from multiple sources, human, avian, dog and other unidentified sources (Figure 41, pg 74). This indicates that the E. coli is not coming from one obvious source, but instead it is accumulating from many sources and being transported to the beach. This finding takes the emphasis off of the remediation of one source and places it on remediation of the delivery system that is transporting the accumulation of many sources to the beach. This delivery system at Sister Bay beach consists mainly of storm water pipes and impervious surface runoff discharging on and near the beach. Additional E. coli concentrations and isolates need to be taken from the storm water pipe.*

It is time to reconsider allowing dogs in our park now that our storm sewer system has been upgraded and our old, small sewer pipes replaced and the sewer system expanded.

The American Veterinary Medical Association's 2011 study states that 63% of dog owners consider their pet a family member. The Episcopal church, and perhaps other churches as well, invite the family pet to church yearly to be blessed. So it is not surprising that pet tourism is a growing business. Hotel chains, including the exclusive Kimpton Hotels and Four Season Hotels and Resorts, offer pet accommodations. But here in Sister Bay a sheriff asked me to leave Marina Fest because my dog was in accompaniment. I and other friends cannot comfortably attend concerts in the park but instead must stand outside the park perimeter with our dogs. Do not underestimate the importance of pet dogs as members of families - families with and without children, young as well as old. When we restrict dogs we frequently restrict their humans.

The dog park is a wonderful place where dogs can run off leash and socialize with other dogs but it's not the place where the family members congregate for social activities. That place is the park where the family, including pet members, want to walk and rest, listen to music or view the beauty of our village. Restricting dogs to the dog park is like restricting children to the playground area.

No one, including responsible dogs owners, want to see unsightly, unhealthy dog droppings in our park. That potential problem can be managed with positive signage requesting that we all help to maintain the beauty of our park by picking up after ourselves and our pets. Positive signage such as "if your dog poops you must scoop" is a friendly reminder that would present Sister Bay as a family friendly community in which to live and visit. Many communities use informative signage such as "dog waste contaminates our water so always use a bag or scooper to pick up after your pet." (Incidentally, at the marina I haven't noticed dog feces or even discolored grass on the beautiful marina lawn.)

Many people, locals and visitors alike, routinely walk for enjoyment and health. Dog walking should be an encouraged activity. Sister Bay already has a limited number of sidewalks so we should not further restrict access to any walkways, especially the spectacularly beautiful park walk.

I cannot understand the significance of Sturgeon Bay's policy on banning dogs in their parks. As far as I am able to determine it was based on one person's opinion. Sister Bay should make an educated and reasonable decision based on Sister Bay factors and not rely on any one person's opinion from Sturgeon Bay.

Sister Bay should allow leashed dogs in our park. It would not harm our beach and would present Sister Bay as a family friendly community, it would promote tourism and allow greater attendance at park functions. And finally it would allow all of us that live here access to the wonderful park that our tax dollars support.

Thank you for considering this matter,

Karen McRoberts
10626 Claflin Ln

Sister Bay Advancement Association ♦P.O. Box 351♦Sister Bay, WI 54234♦920-854-3230

SBAA sponsored and hosted events for 2016

February 12 & 13 – DC Short Film Fest – use of Village Hall. Open to the public

March 26 – Egg Hunt – use of Waterfront Park & Village Hall. Open to the public.

June 11 –Goat Parade – use of Village Hall and Waterfront Park area between Village Hall and Post Office. Brief parade on the highway. Open to the public. North on Hwy 42, from Mill Rd. intersection to Al Johnson's. Possibly an area for people to pet/take pictures with goats either next to Al's or across the street in the grass in North Waterfront Park.

June 25
~~June 18~~ –**Paddlefest.** Use of entire Waterfront park_stage,beach, south side of Village Hall.

July 30 – Plein Air event in Waterfront Park – large tent set up, south end of park, use of stage. Ticketed event, open to the public. Friday set up of tent, take down Sunday.

August 13 – Star Party – use of Sports Complex after dark – minimal impact – telescopes set up. Open to the public.

August 13 – Door County Festival of Fine Arts – Friday 3pm-dark, Saturday 7am-6pm, use of Waterfront Park north side of Village Hall. 10'x10' tents for individual vendors. Open to the public.

Sept. 17 – Peninsula Century bike ride. South end of Waterfront Park, use of stage for band. Large tent set up Friday, take down Sunday. Registration for bike ride required. Post-party/lunch is a ticketed event.

October 14-16– Fall Fest – Use of downtown, Mill Road, Waterfront Park, Village Hall. Open to the public. Wristbanding alcohol drinkers.

November 25-26 – Capture the Spirit –table set up near the Village Christmas tree. Open to the public. Fire Station kitchen on Nov. 26 for cookie decorating. Village Hall Nov. 27 for Family Centers Children's Christmas Store.

Concerts in the Park on the Sister Bay Stage. Open to the public. Village Hall if raining. All concerts will be in the evening, 7-9 p.m. Beer & wine will be served at each concert.

June 29
July 6
July 13
July 27

Recommendations from Waterfront Oversight Committee for Exclusive Weddings & Tented Events

Marina Park:

- $1250.00 flat fee for Friday 1:00 pm through Monday at 10:00 am
- Security deposit $1000.00

Village Hall North (Lienau Hill)

- $1875.00 flat fee for Friday 1:00 pm through Monday at 10:00 am
- Security deposit $1500.00
-

Beachfront

- $3500.00 flat fee for Friday 1:00 pm through Monday at 10:00 am
- Security deposit $3000.00
- These events will only be held in the months of May, June, September and October
- During the months of July and August a total of 2 events may be held. A flat fee of $7,000.00 will be charged for Friday 1:00 pm through Monday at 10:00 am.
- X amount of feet will be partitioned off for beachfront wedding ceremonies by 8:00 am the morning of the ceremony, (to be determined by Facilities Manager).

General recommendations:

- Having up to three preferred tent providers. To be determined by Facilities Manager Steve Mann. Only those providers will be allowed to erect tents on Village property.
- The current fee schedule for non-profits, resident, non-resident, etc. is repealed.
- Unless exclusive use is required, all patrons, and groups shall be able to use the park for free without a permit.
- The Village does not get involved in purchasing tents, chairs, tables, etc. for rental. Leave this to the professionals.

Recommendations from Waterfront Oversight Committee

Pavilion usage

There is a mass exodus at the beach around 4 pm. Other businesses in the village schedule most music later in the evening. We suggest that weekly concerts begin at 5 pm and some special events begin at 7 pm.

Signage in park

- One panel of the new large wayfinding signage displays park rules along with a few small signs at appropriate places throughout the park (for Parks & Plan Commission to determine)
- 3 park rules
  Quiet Hours 10 pm to 7 am
  No pets
  Swim at own risk
- At the large wayfinding sign, have a space for posters of events happening throughout the village, whether they are village, SBAA or private business events. Also the possibility of having poles scattered in the park for posters.

Vendors in Park

- Bayshore Outfitters utilize their current space (from cement pad west to groin) contract for 10 years.
- Bring in local restaurant & business owners to meeting to discuss vendors in the park, before and after RFP's are sent out.
- Advertise for RFP's
- Limit vendors to 4 including Bayshore Outfitters, (3 new)

Dogs in Park

- Dogs not allowed south of village hall where beach is. Dogs allowed north of village hall and Marina Park. Signage to be placed on boardwalk on north edge of village hall, (No dogs allowed past this point).

New bathroom placement

Additional playground equipment and other outdoor games

Lower level of boat house

Village hall rental structure and fees

What did the utilities cost the village last year?

How much income was produced by rentals last year?

Swim dock

Marina

How have our decisions affected Sister Bays brand?

THIS AREA FOR OFFICE USE ONLY	
Deposit	**Use Fee**
Security Deposit Paid Date:	Use Fee Amount:
Security Deposit Check No.:	Use Fee Paid Date:

Village of Sister Bay
2383 MAPLE DRIVE • SISTER BAY, WI 54234
PHONE: (920) 854-4118 • FAX: (920) 854-9637
E-MAIL: INFO@SISTERBAYWI.GOV
WEB SITE: WWWI.SISTERBAYWI.GOV

FACILITY USAGE APPLICATION

NAMES & MAILING ADDRESSES	FACILITY REQUESTED
Applicant (Organization) Door County Folk Festival	**Village Hall (Specify room)** Entire Main Floor (Auditorium & Kitchen)
Street Address P O Box 25548	**Fire Station (Specify room)**
City - State – Zip/Code Chicago, IL 60625	**Waterfront Park (Specify location)**
Contact Person: Name and daytime phone number (include area code) of a person we can contact if we have any questions about your application.	**Sports Complex (Specify building or facility)**
Name: Paul Collins	**Marina Park**
Day Time Phone: 847-846-8139	**Other location (Specify building or facility)**

DATE / TIME REQUESTED	PROPOSED ACTIVITY
Date From: 07/15/16 To: 07/16/16	Briefly describe your event: Folk Festival - Folk Dancing, Folk Singing, Culture Sessions, etc.
Time Start at: 07:30am End at: 12:00am	☐ **Check box if alcoholic beverages are involved.** (See note on back.)
	☐ **Check box if you are using a tent** (See note on back.)

CERTIFICATE

I, the undersigned, hereby apply for a Facility Use Permit, certify that all the information both above and attached is true, and correct to the best of my knowledge. I affirm that the usage will be consistent with the regulations established by the Village. I agree with the fee schedule and regulations shown on the other side of this application.

Signature _____ Date 03/15/2016

Daytime Contact Number (847) 846-8139 Email Address pcollins@dcff.net

APPROVALS

AREA BELOW THIS LINE FOR OFFICE USE ONLY

PARKS COMMITTEE ACTION (IF REQUIRED)

Date Of Decision _____ Decision _____ Key # ___ Date Issued: _____ Date Returned: _____

Approvals	Inspection
☐ APPROVED ☐ DENIED	☐ ACCEPTABLE ☐ UNACCEPTABLE

FACILITY USAGE REGULATIONS

Please note: all reservations will be made on a "first come, first serve" basis. In order to guarantee a reservation a completed application, fees and deposit must be furnished to the Village at 2383 Maple Drive, PO Box 769, Sister Bay, WI 54234. Deposits will normally be returned within 2 weeks of the conclusion of an event unless the building or property requires cleaning in which case the deposit will be withheld.

Reservations for on-going facility usage cannot be made for more than six months at a time. Reservations for single events cannot be made more than 18 months in advance.

The Village reserves the right to cancel a reservation if needs of the Village require the usage of the facility or building at any time in which case the deposit and use fee will be refunded. The Village reserves the right to request written verification of "non-profit" status.

All signage for events taking place must comply with the Village's sign regulations, which requires a permit.

Any group or individual(s) utilizing a Village facility, building or park grounds is/are expected to leave it in as good a condition as it was found. The group or individual also agree to be responsible for any damage caused to the facility, building or park grounds while he/she/they is/are utilizing it and will be billed for any damage and the associated costs of repair.

Any usage proposed for the basement of the Village Hall must have the concurrence of the Teen Center Board of Directors in writing. _____ *Approved Teen Center Board.*

If you intend to use a tent prior to the approval of the permit you must contact the Parks Department at 920-421-0273 to meet on site to stake out the location of the tent in order to protect the sprinkler and electric system from damage. Any damage caused to the sprinkler or electric system from tent stakes will be billed 100% of the total cost to the organization._____ *Approved Location Parks Department.* Your tent supplier **MUST** schedule an appointment with the Parks Department to insure the proper placement of the tent. A Parks employee will be present during the erection of the tent to insure no damage is done to the underground systems. The time spent by Parks staff monitoring the tent location and erection will be billed out to you at the charge out rate.

If you are provided a key to use a facility and you fail to return the key when your event is over the Village reserves the right to charge you for the cost of rekeying the facility consistent with the Building Key Policy.

If any event involves the sale or distribution of alcohol an appropriate permit must be obtained from the Village Clerk. If any special services are provided by the Village as part of the permit they will be billed at the agreed upon rate.

If you or a member of your group drives across the grass in a vehicle you will lose your deposit, and be liable for the cost of repairs. Any group or individual who does not follow these and other Village facility usage regulations may be prohibited from utilizing the facility, building or park grounds in the future.

Door County Folk Festival

(Get Your Foot in the Door)

The following is a summary of DCFF's proposed uses of the Sister Bay Village Hall and Sister Bay Waterfront Park. This 2016 summary is the same as the 2015 usage:

- Fri/Sat 8:00am – 12:00am Village Hall for Festival Dance Events
- Fri/Sat 10:00am - 12noon Waterfront Park for Free Youth Activities
- Fri/Sat 1:00pm - 3:30pm Waterfront Park for Free Youth Activities
- Fri/Sat 3:00pm - 5:00pm Gazebo and Park for Musician/Singing Jam Sessions

All of the events in the Park are free and open to the public.

NOTE 1: The DCFF Insurance Policy renews annually in early July. The Village has copies of DCFF's Certificates of Insurance on file from last year. These Certificates are still in force at the time of the execution of these agreements. DCFF will provide a copy of the current Insurance Certificates after the policy is renewed in early July 2016.

NOTE 2: DCFF will not require use of the Teen Center for 2016.

Agreed As Amended:

Paul E Collins _____ 20 March 2016

Door County Folk Festival Date

_____ _____

Village of Sister Bay Date

Door County Folk Festival – Get Your Foot in the Door!!

P.O. Box 25548 – Chicago, IL 60625

www.dcff.net – ***pcollins@dcff.net*** – (847)-846-8139

AGREEMENT REGARDING THE USE OF VILLAGE OF SISTER BAY PARKLANDS AND FACILITIES FOR DOOR COUNTY DCFF, 2016 – Page 1

This Agreement, by and between the Village of Sister Bay, hereafter referred to as "the Village", and the Door County Festival Organization, hereafter referred to as "DCFF", pertains to the use of Village of Sister Bay facilities and parklands for the 2016 Door County Festival Event.

The Village's Parks Committee has granted permission for DCFF participants to resume dancing and singing in Waterfront Park and on the pier on Thursday, July 14, 2016 from 7:30P.M. to sunset, and has also granted permission for DCFF to use the Village Hall, Waterfront Park and the Gazebo on Thursday, July 14, 2016, Friday, July 15, 2016 and Saturday, July 16, 2016, on the condition that all the rules on the Village's Facility Use Application are adhered to by DCFF organizers and attendees. (Copies of those rules as well as the Facility Use Fee Schedule are hereby attached and incorporated by reference.)

The following special rules and regulations will also apply to DCFF, 2016:

1. DCFF must submit a completed Facility Use Application to the employees in the Village Administration Office no later than Monday, April 14, 2016. On that application DCFF shall clearly delineate a// the Village facilities and specific areas of Waterfront Park they wish to utilize for DCFF, 2016, and must also clearly delineate the dates and times they wish to utilize each of those facilities and/or parklands.

2. If DCFF wishes to utilize the lower level of the Village Hall they must provide written verification from Deb Anderson, the Teen Center Representative, that all necessary arrangements have been made for the use of that area to the employees in the Village Administration Office no later than Monday, April14, 2016.

3. DCFF will be charged the Village's standard facility use fees, and will also be required to post the required security deposit(s) for each of the facilities or parklands they wish to utilize for DCFF. No reservation will be finalized until all fees and security deposits have been paid in full, and all required fees and deposits must be paid by Friday, June 27, 2016. The only exception to this rule will be the free activities which are conducted in conjunction with DCFF. (The Parks Committee has determined that no use fees should be charged for those activities since they are offered to DCFF participants as well as members of the public free of charge.)

4. DCFF will not be a given a key for the Village Hall until noon on Thursday, July 14, 2016, and will pick up that key at the Administration Building - 2383 Maple Drive, Sister Bay, WI.

5. DCFF attendees will only be allowed to utilize the Village Hall from 6:30 A.M. to 11:00 P.M. on Thursday, July 14, 2016 and Friday, July 15, 2016, and from 7:00 A.M. to 11:00 P.M. on Saturday, July 16, 2016. They may also resume dancing and singing in Waterfront Park and on the pier on Thursday, July 14, 2016 from 7:30 P.M. to sunset, and may use Waterfront Park and the gazebo for DCFF activities. DCFF and/or DCFF organizers will be responsible for seeing that all attendees are dispersed after 11:00 P.M. on each of those days.

6. Festival organizers and staff members will be allowed to set up in the Village Hall after noon on Thursday, July 14, 2016 and will be allowed to stay in the Hall until midnight on that day. They will also be allowed to utilize the Village Hall from 6:00 A.M. to midnight on Friday, July 15, 2016 and Saturday, July 16, 2016, but at midnight on all of those dates all interior lights must be extinguished and the hall locked up and vacated. DCFF will see that the Village Hall is cleaned up and totally vacated by midnight on Saturday, July 16, 2016.

AGREEMENT REGARDING THE USE OF VILLAGE OF SISTER BAY PARKLANDS AND FACILITIES FOR DOOR COUNTY DCFF, 2016 – Page 2

7. Under no circumstances will anyone participating in or involved with DCFF, 2016 be allowed to stand around in waterfront park or outside the village hall to visit, play music or dance after 11:00 p.m.

8. All DCFF organizers/staff members and attendees must be mindful of the fact that they do not have exclusive rights to the use of Waterfront Park, and must treat individuals who are in the park but are not participating in the DCFF with respect at all times.

9. If DCFF wishes to utilize any of the Village's picnic tables for any DCFF activities they must inform the employees in the Village Administration Office of the number of tables they would like to use by Friday, July 1, 2016. The Village's Facilities Manager, Steve Mann, will see that the picnic tables are secured near the Village Hall prior to the requested date(s) and will also see that DCFF is provided a key for the lock(s). DCFF and his associates will be responsible for moving the picnic tables to the desired location(s) and must also see that all the picnic tables are returned to the secure area and locked up by Sunday, July 17, 2016.

10. DCFF will be billed the applicable "charge-out" rates for the picnic table moving services.

11. No one involved with DCFF, 2016 will be allowed to drive vehicles on the grassy areas of any Village owned property or parklands. All vehicles must be parked on asphalt surfaces.

This agreement will be binding upon the Village of Sister Bay and the Door County Festival, as well as any of their agents and/or successors.

Door County Folk Festival acknowledges that it does realize that the Parks Committee will be monitoring compliance with the previously mentioned rules and regulations. Failure to comply with any or all of those rules and regulations will lead to forfeiture of facility use deposits.

Dated this _____day of _____ 2016.

Village of Sister Bay

By: _____

Zeke Jackson
Village Administrator

Door County Festival

By: _____

Paul Collins
Co-Director

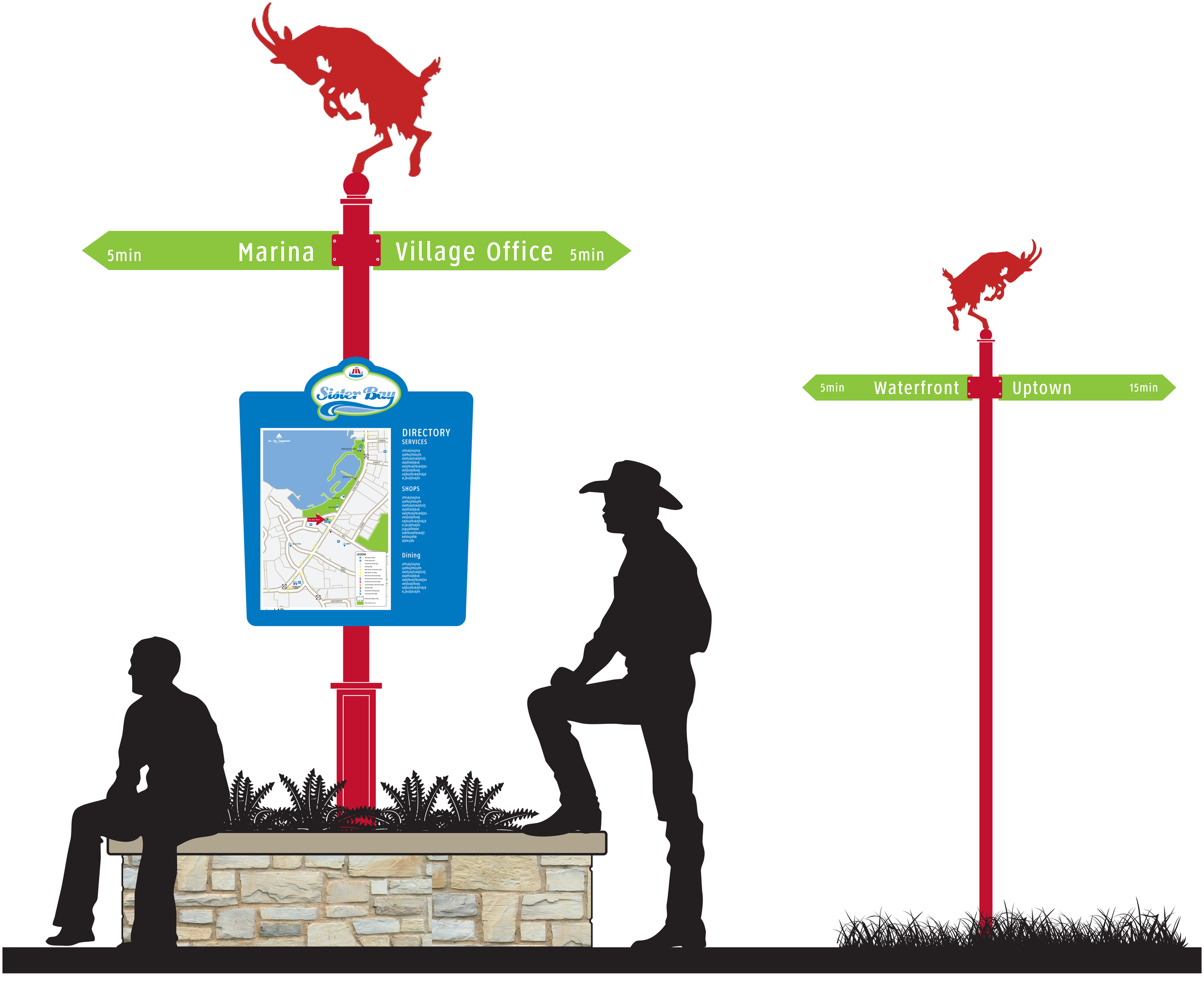

P1-Informational Kiosk

P2-Directional Sign

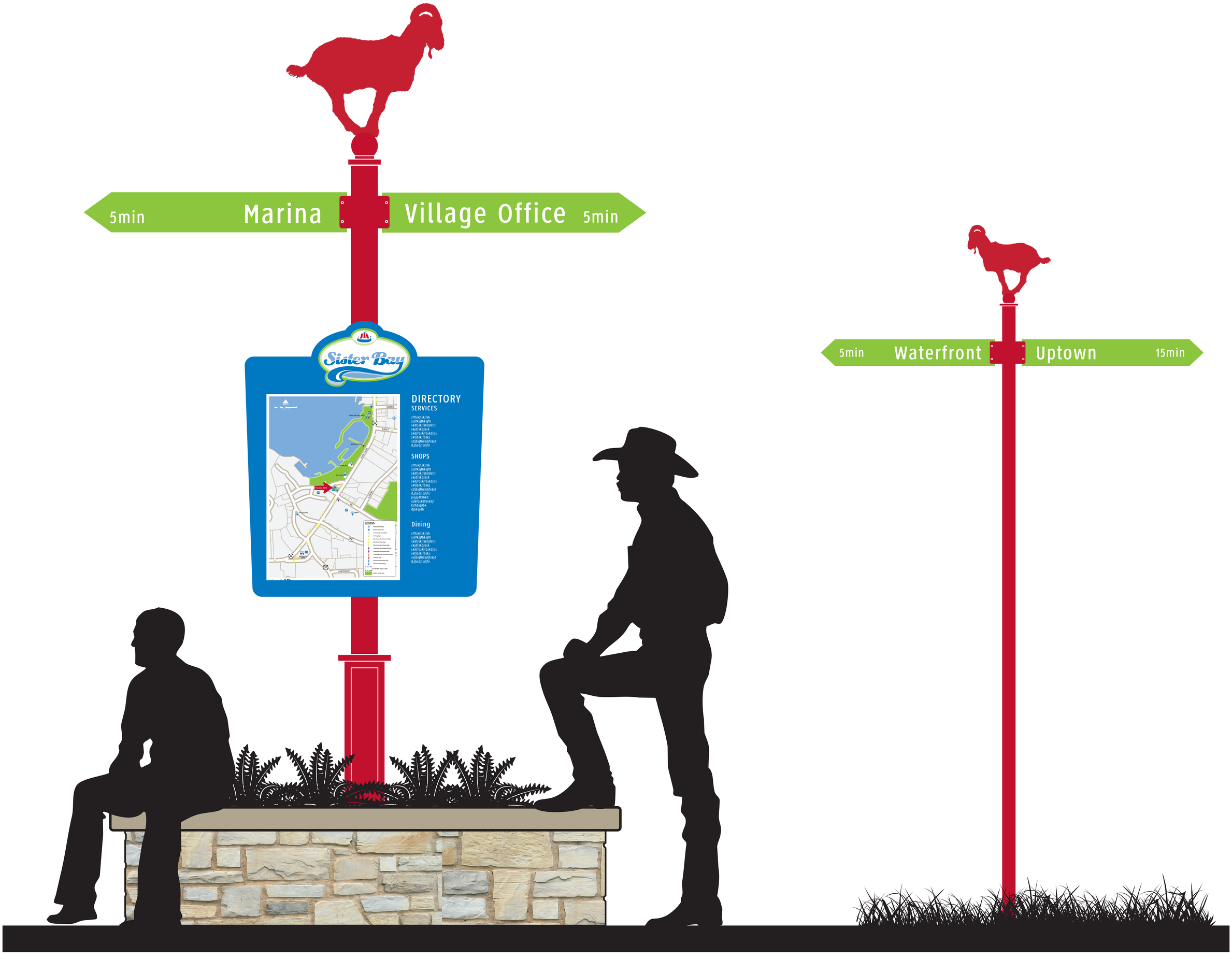

P1-Informational Kiosk

P2-Directional Sign

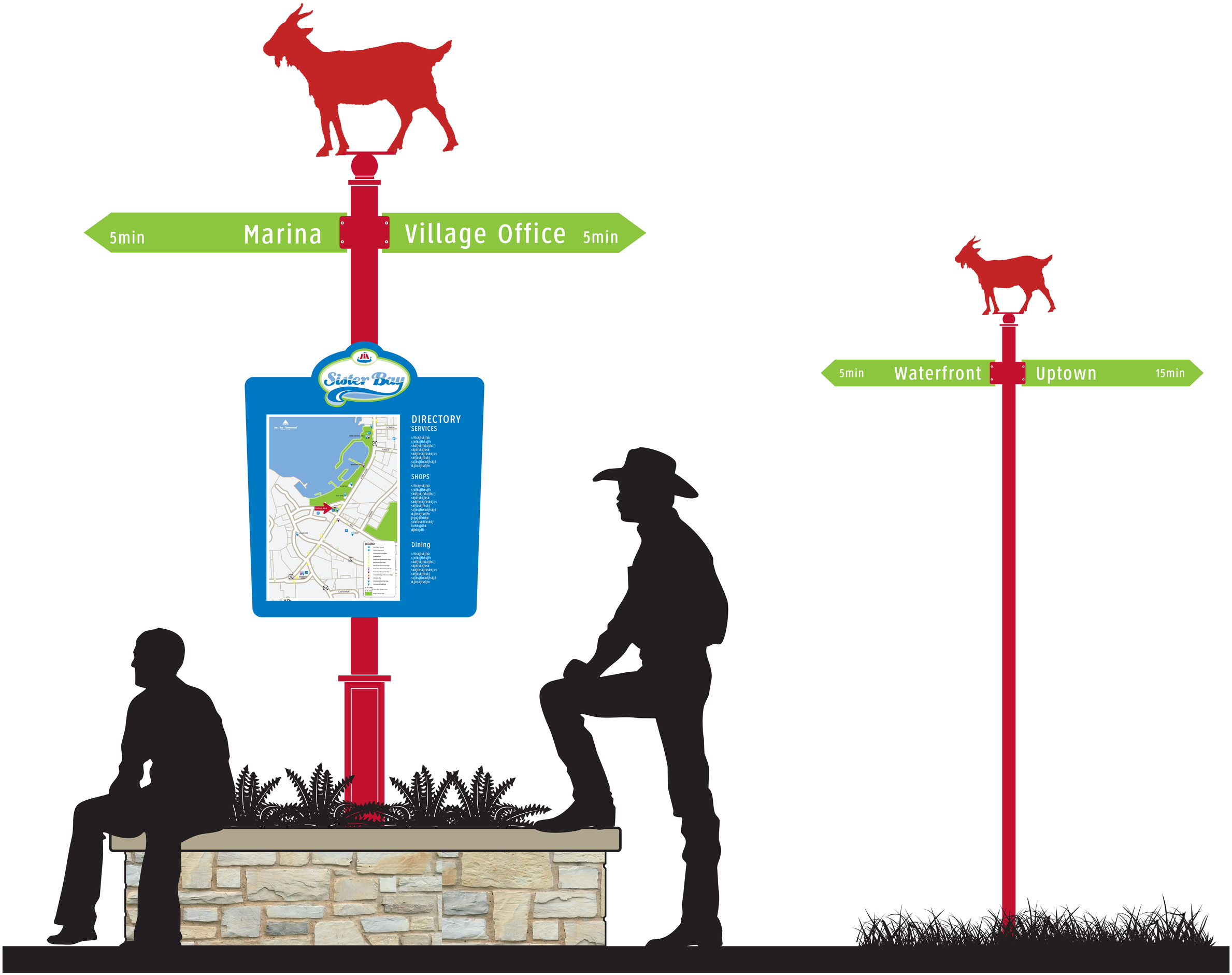

P1-Informational Kiosk

P2-Directional Sign

FREE SHIPPING ON ALL ORDERS

800-637-3181 sales@projectorscreenstore.com (mailto:sales@projectorscreenstore.com)

CHECKOUT (/STORE/SHOPCART.ASPX)
VIEW CART (/STORE/SHOPCART.ASPX)

SIGN UP FOR DISCOUNTS (HTTPS://WWW.PROJECTORSCREENSTORE.COM/JOIN-PROJECTOR-SCREEN-STORE)

ProjectorScreenStore
(/)

Keywords, Model # or Item # Search

(https://twitter.com/PssScreen) (https://www.pinterest.com/alltecstores/)
(https://plus.google.com/+Projectorscreenstore/posts)
(https://www.youtube.com/channel/UC6tqqG_fnSNGk7bsWx12T-Q/feed)
(https://www.facebook.com/pages/Projector-Screen-Store/219285578220595) -
BLOG (HTTP://BLOG.PROJECTORSCREENSTORE.COM/) NEED A CUSTOM SIZE?

DA-LITE (/store/m/11-Da-Lite.html) - 232" Diag. 84x216 Manual Scenic Roller Projector Screen, Square Format, Matte White Fabric

Click to Chat

(/resize/shared/images/products/da_lite/scenic_roller.jpg?lr=t&bw=1000&w=1000&bh=1000&h=1000)

Item Number: 40332

DA-LITE (/store/m/11-Da-Lite.html)

No Casing for Screen

Usually Ships in 3-5 Business Days ()

Retail: $2,160.00

$1,890.00

You Save: $270.00 (12.5%)

Quantity:

1 **ADD TO CART**

FREE GROUND SHIPPING

ON EVERY ITEM EVERY DAY

Click to learn more

0

DESCRIPTION REVIEWS (0) RELATED ITEMS

All Da-Lite projector screens are custom built to order and Made in the USA.

Da-Lite Manual Scenic Roller Series

The Scenic Roller is a manual screen for large venue, stage or auditorium settings. It is manually operated with a rope and concealed nylon pulley system.

Ideal for large screen applications on stages or in auditorium settings this manually operated roll-up screen comes in sizes up to 30'H x 30'W. Easy to use rope and pulley system with concealed nylon pulleys raises and lowers screen effortlessly and quietly. Integrated turnbuckle assures proper fabric hang on wide screens. Matte White will be seamless up to 16' high.

Product Information

- **Screen Size:** 232" Diagonal
- **Viewable Screen Area:** 84" x 216"(HxW)
- **Product Type - Operation:** Manual Rope Pulley Operation - Hanging Wall/Ceiling Installation
- **Aspect Ratio:** Square (1:1) Format
- **Projector Screen Surface:** Matte White Fabric
- **Projector Screen Case Color:** None

Da-Lite Manual Scenic Roller Instructions (http://v3.alltecstores.com/manuals/Da-Lite Manual Scenic Roller Instructions.pdf)

Da-Lite Manual Scenic Roller Product Information (http://v3.alltecstores.com/manuals/pdfs/Da-Lite Manual Scenic Roller Product Information.pdf)

Da-Lite Manual Scenic Roller Specifications (http://v3.alltecstores.com/manuals/pdfs/Da-Lite Manual Scenic Roller Specifications.pdf)

Matte White Fabric

Half Angle: 60° / Gain: 1.0

Matte White is a fiberglass surface for non high-definition projection and environments with controllable ambient light that preserves color as well as black and white images. Seamless sizes vary by product. Matte White can be cleaned with mild soap and water, is flame retardant and mildew resistant. This surface has achieved GREENGUARD GOLD Certification.

(https://www.facebook.com/pages/Projector-Screen-Store/219285578220595) (https://twitter.com/PssScreen) (https://www.youtube.com/channel/UC6tqqG_fnSNGk7bsWx12T-Q/feed) (https://plus.google.com/+Projectorscreenstore/posts) (http://blog.projectorsforsale.com/) (https://www.pinterest.com/alltecstores/)

Directory

Home (/)
About Us (/about)
Projectors (/pss-projectors.html)
Screens (/pss-projector-screens.html)
Brands (http://www.projectorscreenstore.com/store/pg/286-Brands.html)
Accessories (/pss-accessories.html)

Customer Service

My Account (/store/login.aspx)
Login/Sign Up (/store/login.aspx)
Wishlist (/store/WishList.aspx)
Return Policy (/returnpolicy)
Privacy Policy (/privacypolicy.html)
Contact Us (/contactus.html)

Knowledge Base

Gov. & Edu. Programs (/governmentprograms)
Screen Sizes (/screensizes)
Screen Buying Guide (/projector-screen-buying-guide.html)
Screen Surface Info (/screensurfaceinfo)
Distance Calculator (/viewing-distance-calculator.html)
Terms & Conditions (/terms-and-conditions.html)
PSS Blog (http://blog.projectorscreenstore.com/)

Information

Powered By

Contact Us

80 Little Falls Road
Fairfield, New Jersey 07004

Sales & Support
Phone: 800.637.3181
Fax: 800.965.7836
sales@projectorscreenstore.com
(mailto:sales@projectorscreenstore.com)

Alltec Stores (http://www.alltecstores.com/)
All Cart Store (http://www.allcartstore.com/)
All Whiteboards (http://www.allwhiteboards.com/)

Projector Screen Store (http://www.projectorscreenstore.com/)
Podium and Lectern Store (http://www.podiumandlecternstore.com/)

Shop with Confidence

PARTICIPATING STORE
02/23/16 by bizrate

(//www.bizrate.com/ratings_guide/merchant_detail__mid--195306.html?rf=sur) EV SSL Certificate (https://ssl.comodo.com/ev-ssl-certificates.php)

© 2016 Projector Screen Store All rights reserved Trouble viewing this page or experiencing errors?
Email: sales@projectorscreenstore.com (mailto:sales@projectorscreenstore.com)

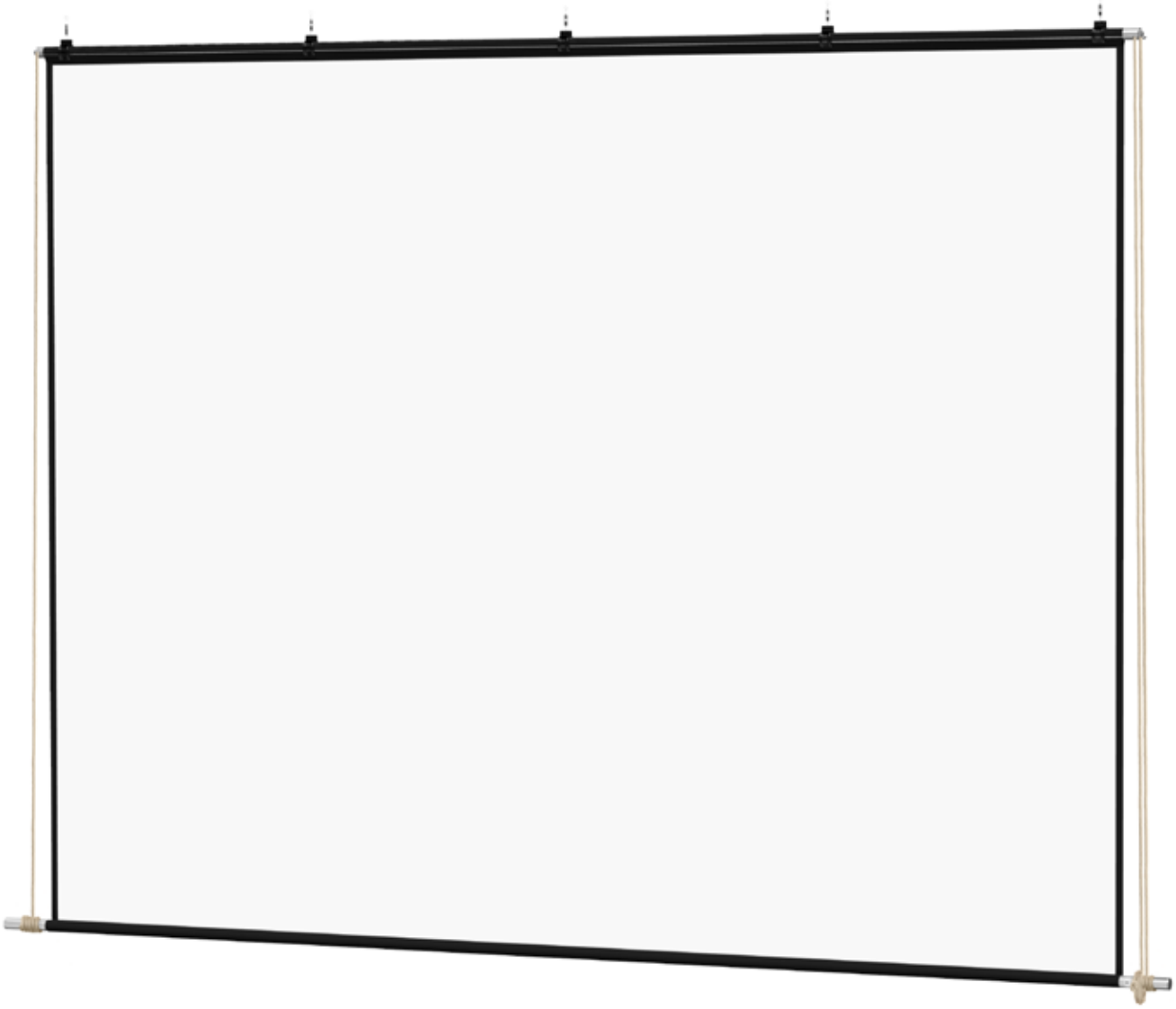

INSTRUCTION BOOK FOR

Scenic Roller

DA-LITE®

Pre-Installation

Having decided on hooks, chains, cables or other mounting method, have mounting prepared before opening box.
Do not mount screen against walls that might rub fabric.

Installation

1. Remove screen from box by lifting roller at the ends. Be careful not to permit lid or any tools to fall on screen. During installation handle unit only by ends of roller and top header. Do not grasp around fabric–do not rest unit on fabric.
2. Remove wrapping paper and unwind ropes.
3. With the screen lying on the floor, install the clamps on the reinforcement tape on the header as shown in Figure 2. Clamp assembly is shown in Figure 1. Drop the closed loop of the turnbuckle in the slot of the clamp before inserting bolt. Each clamp uses three bolts and nuts. Do not tighten nuts any more than finger tight. Make sure the ends of clamps do not push into the fabric. Pulleys at each end of header must be in the vertical position, when hung for proper operation.
4. Adjust top header in fabric pocket to the 2-1/4" and 3-3/4" position shown on the drawing.
5. Hang the screen in place at three, five, or seven points.

⚠ **CAUTION! When this screen is shipped from the factory, there are 2-1/2 turns of rope around each end of the roller. Make certain that this is left unchanged to insure good operation.**

⚠ **CAUTION! Before dropping fabric make certain ropes at end of bottom roller do not overlap. Overlapping of ropes will cause rope to work inward and thus damage the fabric.**

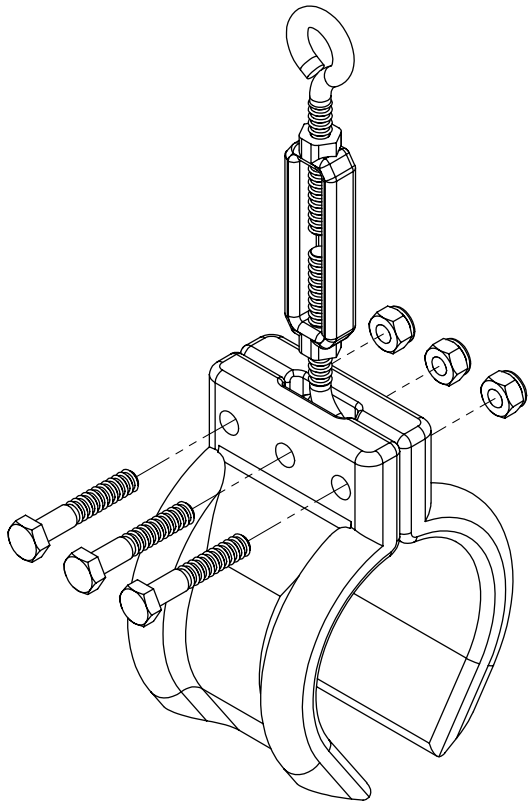

Figure 1 – Clamp Assembly

Screen Adjustment

1. Lower screen slowly by gradually releasing ropes.
2. With screen in the "Down" position, turn the header in the fabric pocket carefully to adjust the pulleys to a vertical end position. Check the 2-1/4" and 3-3/4" end tube dimensions. Adjust the clamps on the reinforcement tape. Clamps are not to push into fabric pocket. Tighten nuts on all bolts.
3. Total screen drop may be controlled by adjusting rope clamp. Do not adjust for more drop.
4. With unit in completely unrolled position, examine the screen carefully. If slight sag appears in center of fabric, adjust turnbuckles at the eye bolts until fabric hangs flat.
5. Screen may be raised by pulling on ropes. Tie off ropes to keep screen in raised position.
6. Protect your screen against damage and it will give many years of enjoyment.
   a. When lowering screen, do so gently. Never allow it to drop uncontrolled.
   b. Before raising screen, be sure both front and back sides are free from insects or any foreign matter.
   c. Form the habit of looking in space between fabric and roller for foreign matter before raising screen.
   d. Caution stage hands and others to avoid bumping screen with ladders, scenery, etc.

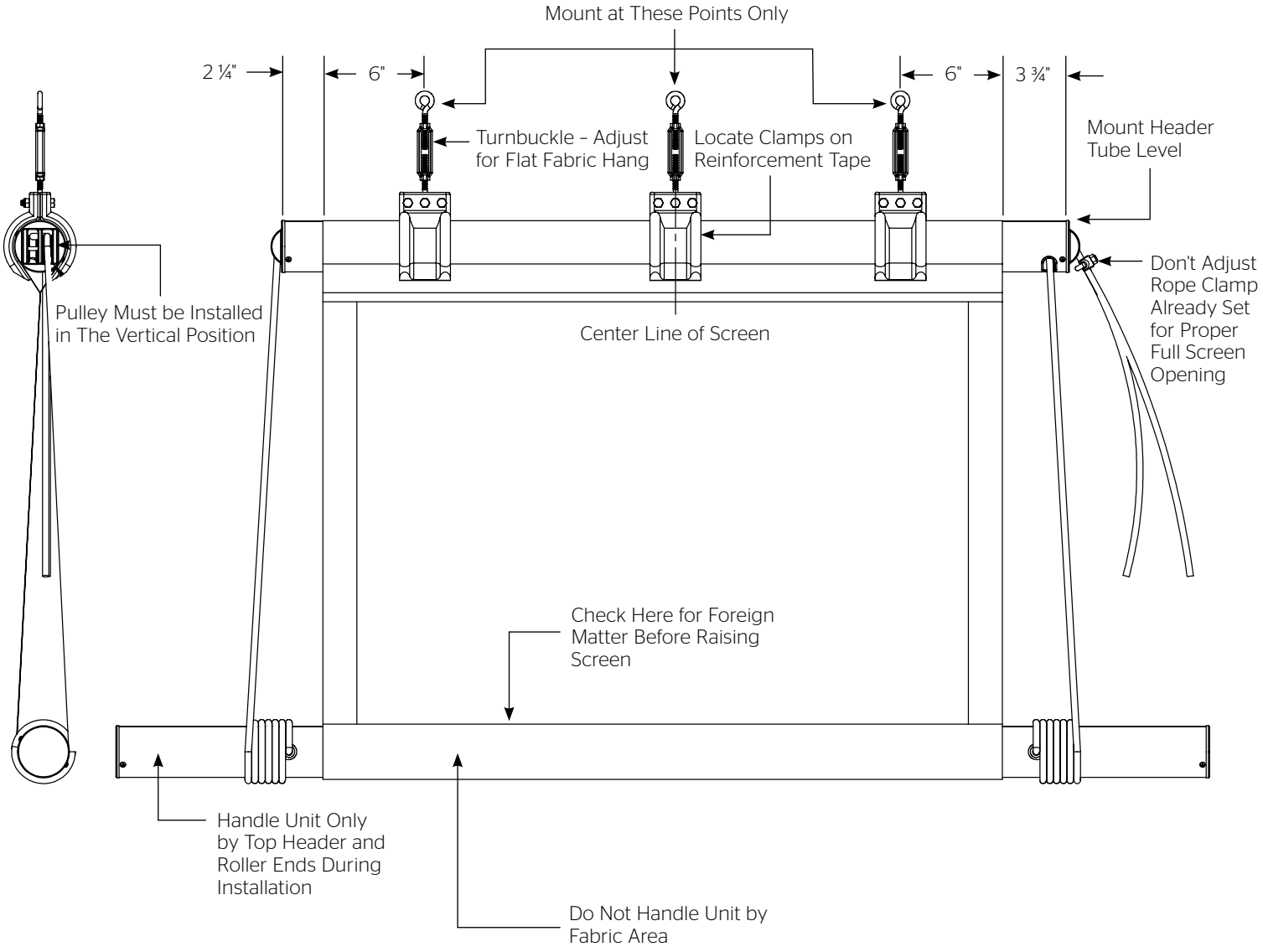

Figure 2

LIMITED ONE YEAR WARRANTY ON DA-LITE PRESENTATION PRODUCTS

Milestone AV Technologies LLC warrants certain Da-Lite branded products to the original purchaser only, to be free from defects in materials and workmanship for a period of one (1) year from the date of purchase by the original purchaser; provided they are properly operated according to Da-Lite's instructions and are not damaged due to improper handling or treatment after shipment from the factory.

This warranty does not apply to equipment showing evidence of misuse, abuse or accidental damage, or which has been tampered with or repaired by a person other than authorized Da-Lite personnel.

Da-Lite's sole obligation under this warranty shall be to repair or to replace (at Da-Lite's option) the defective part of the merchandise. Returns for service should be made to your Da-Lite dealer. If it is necessary for the dealer to return the screen or part to Da-Lite, transportation expenses to and from Da-Lite are payable by the purchaser and Da-Lite is not responsible for damage in shipment. To protect yourself against damage or loss in transit, insure the product and prepay all transportation expenses.

TO THE MAXIMUM EXTENT PERMITTED BY APPLICABLE LAW, THIS WARRANTY IS IN LIEU OF ALL OTHER WARRANTIES, EXPRESS OR IMPLIED, INCLUDING WARRANTIES AS TO FITNESS FOR USE AND MERCHANTABILITY. Any implied warranties of fitness for use, or merchantability, that may be mandated by statute or rule of law are limited to the one (1) year warranty period. This warranty gives you specific legal rights, and you may also have other rights, which vary from state-to-state. **TO THE MAXIMUM EXTENT PERMITTED BY APPLICABLE LAW, NO LIABILITY IS ASSUMED FOR EXPENSES OR DAMAGES RESULTING FROM INTERRUPTION IN OPERATION OF EQUIPMENT, OR FOR INCIDENTAL, DIRECT, OR CONSEQUENTIAL DAMAGES OF ANY NATURE.**

In the event that there is a defect in materials or workmanship of a Da-Lite product, you may contact our Sales Partners at PO Box 137, Warsaw, IN 46581-0137, (574) 267-8101, (800) 622-3737.

IMPORTANT: THIS WARRANTY SHALL NOT BE VALID AND DA-LITE BRANDED PRODUCTS SHALL NOT BE BOUND BY THIS WARRANTY IF THE PRODUCT IS NOT OPERATED IN ACCORDANCE WITH THE DA-LITE WRITTEN INSTRUCTIONS.

Keep your sales receipt to prove the date of purchase and your original ownership.

A Milestone AV Technologies Brand

3100 North Detroit Street
Warsaw, Indiana 46582
P: 574.267.8101 or 800.622.3737
F: 574.267.7804 or 877.325.4832
E: info@da-lite.com
www.da-lite.com

DL-0132 (Rev. 2) 12.13
© 2013 Milestone AV Technologies LLC. Printed in U.S.A.

45037