PLAN COMMISSION MEETING AGENDA

Friday, December 13, 2013 at 5:30 P.M.

Sister Bay-Liberty Grove Fire Station – 2258 Mill Road, Sister Bay, WI

For additional information check: Http://www.sisterbaywi.info

In order for everyone to hear the discussion please, turn off your cell phone. Thank you.

Call Meeting to Order / Roll Call Deviations from the agenda order shown may occur.

Comments, correspondence and concerns from the public

Approval of the agenda

Approval of minutes as published

Business Items

1. Discuss Sections of the Comprehensive Plan and CUPAC study.
2. Discuss Sections of Chapter 54 of the Sister Bay Municipal Code.
3. Discuss potential changes to the Officially Mapped Streets on the Official map.
4. Matters to be placed on a future agenda or referred to a Committee, Official or Employee

Adjournment

Public Notice

Questions regarding the nature of the agenda items or more detail on the agenda items listed above scheduled to be considered by the governmental body listed above can be directed to Zeke Jackson, Village Administrator at 920-854-4118 or at zeke.jackson@sisterbaywi.gov. It is possible that members of and possibly a quorum of members of other governmental bodies of the municipality may be in attendance at the above-stated meeting to gather information; no action will be taken by any governmental body at the above-stated meeting other than the governmental body specifically referred to above in this notice. Upon reasonable notice, a good faith effort will be made to accommodate the needs of disabled individuals through sign language interpreters or other auxiliary aid at no cost to the individual to participate in public meetings. Due to the difficulty in finding interpreters, requests should be made as far in advance as possible preferably a minimum of 48 hours. For additional information or to request this service, contact the Sister Bay Village Administrator at 854-4118, (FAX) 854-9637, or by writing to the Village Administrator at the Village Administration Building, 2383 Maple Drive, PO Box 769, Sister Bay, WI 54234. Copies of reports and other supporting documentation are available for review at the Village Administration Building during operating hours. (8 a.m. – 4 p.m. weekdays).

I hereby certify that I have posted a copy of this agenda at the following locations:

☐ Administration Building ☐ Library ☐ Post Office

_____ / _____

Name Date

Land Division
and
Platting Code

Chapter 54
of the
Municipal Code
of the
Village of
Sister Bay, Wisconsin

Amended:

April 19, 2005
October 2, 2007

Village Land Division Code

Chapter 54

Land Division Code

Table of Contents

INTRODUCTION **3**
Sec. 54.01 Introduction and Purpose. 3
Sec. 54.02 Abrogation and Greater Restrictions. 3
Sec. 54.03 Interpretations. 3
Sec. 54.04 Severability. 3
Sec. 54.05 Repeals. 3
Sec. 54.06 Title. 3
Sec. 54.06 Adoption. 3

GENERAL PROVISIONS **4**
Sec. 54.40 General Provisions. 4
Sec. 54.41 Land Suitability. 5
Sec. 54.42 Condominium Developments. 5
Sec. 54.43 Miscellaneous Provisions. 6

OFFICIAL MAP **8**
Sec. 54.50 Official Map 8
Sec. 54.51 Changes and Additions 8
Sec. 54.52 Zoning Permits 8
Sec. 54.53 Municipal Improvements 8
Sec. 54.54 Appeals 8
Sec. 54.55 Certified Copy of Map 8
Sec. 54.56 Map to be Filed with Register of Deeds 9
Sec. 54.57 Enforcement 9

PLAT REVIEW AND APPROVAL **11**
Sec. 54.60 Preliminary Consultation. 11
Sec. 54.61 Submission of Preliminary Plat. 11
Sec. 54.62 Preliminary Plat Review and Approval. 12
Sec. 54.63 Final Plat Review and Approval. 13
Sec. 54.64 Replat. 14
Sec. 54.65 Determination of Adequacy of Public Facilities and Services. 15

TECHNICAL REQUIREMENTS FOR PLATS AND CERTIFIED SURVEYS **17**
Sec. 54.80 Technical Requirements for Preliminary Plats. 17
Sec. 54.81 Technical Requirements for Final Plats. 19
Sec. 54.82 Requirements for Certified Survey Maps. 21

REQUIRED IMPROVEMENTS **22**
Sec. 54.100 Improvements Required. 22
Sec. 54.101 Development Agreements Required for Proper Installation of Improvements. 22
Sec. 54.102 Required Construction Plans; Village Review; Inspections. 26
Sec. 54.103 Street, Curb and Gutter Improvements and Drainage Facilities. 27
Sec. 54.104 Sidewalks and Bikeways. 28
Sec. 54.105 Sanitary Sewerage System. 28
Sec. 54.106 Water Supply Facilities. 33
Sec. 54.107 Other Utilities. 33
Sec. 54.108 Street Lamps. 34
Sec. 54.109 Street Signs. 35
Sec. 54.110 Street Trees. 35
Sec. 54.111 Erosion Control. 35

Village Land Division Code

Sec. 54.112 Easements. 35
Sec. 54.113 Over-Sizing and Off-Site Facilities. 36
Sec. 54.114 Acceptance of Improvements and Dedications. 36
Sec. 54.115 Site Grading. 37

DESIGN STANDARDS 39
Sec. 54.120 General Street Design Standards. 39
Sec. 54.121 Block Design Standards. 41
Sec. 54.122 Lot Design Standards. 42
Sec. 54.123 Drainage and Stormwater Management System. 43
Sec. 54.124 Reserved. 45
Sec. 54.125 Grading. 45

PARK AND PUBLIC LAND DEDICATIONS 47
Sec. 54.140 General Park and Public Land Dedication Requirements. 47
Sec. 54.141 Land Dedication. 47
Sec. 54.142 Development of Park Area. 47

FEES 49
Sec. 54.160 Administrative and Other Fees. 49
Sec. 54.161 Levy of Special Assessments. 49
Sec. 54.162 Includable Costs. 49
Sec. 54.163 Engineer's Report. 50
Sec. 54.164 Notice and Hearing. 50
Sec. 54.165 Waiver of Notice and Hearing. 50
Sec. 54.166 Resolution Levying Assessments. 50
Sec. 54.167 Reserved. 51
Sec. 54.168 Appeal of Special Assessments. 51
Sec. 54.169 Property Excluded from Special Assessment. 51
Sec. 54.170 Special Charges. 51
Sec. 54.171 Payment Plans. 51
Sec. 54.172 Existing Deferred Special Assessments. 51
Sec. 54.173 Village Owned Property. 51
Sec. 54.174 Notice of Levy of Special Assessment. 51
Sec. 54.175 Schedule of Rates for Assessments. 51
Sec. 54.176 Oversizing Rates and Policy. 51
Sec. 54.177 Reserved. 51
Sec. 54.178 Corner Parcels. 51
Sec. 54.179 Double Frontage Parcels. 52
Sec. 54.180 Lots Created by Re-division or Combination. 52
Sec. 54.181 Reconstruction Jurisdiction and Policy. 52
Sec. 54.182 Other Authority Retained. 53

VARIATIONS; PENALTIES AND VIOLATIONS 55
Sec. 54.190 Variations and Exceptions. 55
Sec. 54.191 Enforcement, Penalties and Remedies. 55
Sec. 54.192 Disclaimers on Approvals. 57
Sec. 54.193 Restrictions for Public Benefit. 58

DEFINITIONS 60
Sec. 54.200 Definitions. 60

INDEX 64

MAP AND TEXT AMENDMENTS 66

APPENDIX OF ILLUSTRATIONS 67

INTRODUCTION

Sec. 54.01 Introduction and Purpose.

(a) Introduction. In accordance with the authority granted by Sections 236.13(1)(b) and 236.45 of the Wisconsin Statutes and for the purposes listed in Sections 236.01 and 236.45 of the Wisconsin Statutes, the Board of Trustees of the Village of Sister Bay, Wisconsin, does hereby ordain as follows: The provisions of this chapter shall be held to be minimum requirements adopted to promote the health, safety, comfort, prosperity and general welfare of the Village.

(b) Purpose. The purpose of this chapter is to promote the public health, safety and general welfare of the community. The regulations are designed to lessen congestion in the highways and streets; to foster the orderly layout and use of land; to secure safety from fire, panic and other dangers; to provide adequate light and air, including access to sunlight for solar collectors; to discourage overcrowding of the land; to facilitate adequate provision for transportation, public water and sewerage, parks, playgrounds and other public necessities; and to facilitate the further division of large tracts of land into smaller parcels. The regulations are made with the reasonable consideration of, but not limited to, the present character of the Village and its environs, with the objectives of conserving the value of the land and improvements placed thereon, providing the most appropriate environment for human habitation, encouraging commerce and tourism, protecting open spaces, and providing for the most appropriate use of land in the Village.

Sec. 54.02 Abrogation and Greater Restrictions.

It is not intended by this chapter to repeal, abrogate, annul, impair, or interfere with any existing easements, covenants, agreements, rules, regulations or permits previously adopted or issued pursuant to law. However, where this chapter imposes greater restrictions, the provisions of this chapter shall govern.

Sec. 54.03 Interpretations.

In their interpretation and application, the provisions of this chapter shall be held to be minimum requirements and shall be liberally construed in favor of the Village and shall not be deemed a limitation or repeal of any other power granted by the Wisconsin Statutes.

Sec. 54.04 Severability.

If any provision of this chapter is invalid or unconstitutional, or if the application of this chapter to any person or circumstances is invalid or unconstitutional, such invalidity or unconstitutionality shall not affect the other provisions or applications of this chapter which can be given effect without the invalid or unconstitutional provision or application.

Sec. 54.05 Repeals.

All other ordinances or parts of ordinances of the Village inconsistent or conflicting with this chapter, to the extent of the inconsistency only, are hereby repealed.

Sec. 54.06 Title.

This chapter shall be known as, referred to, or cited as the "VILLAGE OF SISTER BAY LAND DIVISION AND PLATTING CHAPTER."

Sec. 54.06 Adoption.

This code was adopted as Ordinance No. 104-110904 on November 9, 2004 and was effective upon publication on November 13, 2004.

GENERAL PROVISIONS

Sec. 54.40 General Provisions.

Wisconsin Administrative Code. The rules of administrative agencies having rule-making authority in Wisconsin, published in a loose-leaf, continual revision system, as directed by Sec. 35.93 and Chapter 227 of the Wisconsin Statutes, including subsequent amendments to those rules.

(a) Compliance. No person shall divide any land located within the jurisdictional limits of these regulations which results in a subdivision, land division, land conveyance, consolidation, or a replat as defined herein; no such subdivision, land division, land conveyance, consolidation, or replat shall be entitled to recording; and no street shall be laid out, nor improvements made to land, nor building permits issued for any land division without compliance with all requirements of this chapter and the following:

(1) The provisions of Ch. 236 and Sec. 80.08, Wisconsin Statutes

(2) The rules of the Division of Plumbing, Wisconsin Department of Commerce, contained in Wis. Adm. Code Chapter H85 for subdivisions not served by public sewer.

(3) The rules of the Division of Highways, Wisconsin Department of Transportation contained in Wis. Adm. Code Chapter HY 33 for subdivisions which abut a state trunk highway or connecting street. [Note that compliance with Trans 233 may be required for other types of development in 2005.}

(4) The rules of the Wisconsin Department of Natural Resources contained in the Wis. Adm. Code for the Floodplain Management Program, and the Shoreland/ Wetlands Management Program.

(5) Comprehensive plans or components of such plans prepared by state, regional, county or municipal agencies duly adopted by the Board of Trustees.

(6) All applicable local and county regulations, including zoning, sanitary, building and official mapping ordinances.

(7) The Village Comprehensive Plan and Official Map, or components thereof:

a. Whenever a parcel to be subdivided embraces any part of a street, highway or greenway designated in said Comprehensive Plan or Official Map, such part of such proposed public way shall be platted and dedicated by the subdivider in the location and at a width indicated along with all other streets in the subdivision.

b. Where a proposed public ground shown on the Comprehensive Plan or Official Map of the Village is located in whole or in part within the proposed subdivision, such proposed public ground or park shall be dedicated to the public when dedication is required by this chapter.

(8) All applicable rules contained in the Wisconsin Administrative Code not listed in this Subsection.

(9) The sewer and water rules of the Sister Bay Sewer and Water Utility on file with the Public Service Commission of the State of Wisconsin concerning sewer and water installations and services.

(b) Jurisdiction. The provisions of this chapter, as they apply to divisions of tracts of land into less than five parcels, shall not apply to:

(1) Transfers of interests in land by will or pursuant to court order;

(2) Leases for a term not to exceed ten years, mortgages or easements;

(3) Sale or exchange of parcels of unplatted land between adjoining property owners or where no additional lot is created.

(c) Certified Survey. Any division of land other than a subdivision as defined in Sec. 236.02(8), Wisconsin Statutes, shall be surveyed and a certified survey map prepared as provided in Sec. 236.34, Wiscon-

sin Statutes, subject to approval of the Board of Trustees.

(d) Compliance; Issuance of Permits. The Village shall not recognize, and no zoning, building or other permits shall be issued by the Village authorizing the building on, occupancy, or improvement of any parcel of land not on record as of the effective date of this chapter until the provisions and requirements of this chapter have been fully complied with and a resolution approving the land division has been adopted by the Board of Trustees of the Village.

(e) Applicability to Condominiums. This chapter is expressly applicable to condominium developments within the Village's jurisdiction, pursuant to Sec. 703.27(1), Wisconsin Statutes

(f) Recording of Plats or Certified Surveys. Plats and certified surveys, approved by the Board of Trustees, must be recorded with the Door County Register of Deeds. The number, volume and page of the recording shall be filed with the Village Clerk, Zoning Administrator and Village Engineer prior to issuance of any permits.

Sec. 54.41 Land Suitability.

(a) Suitability. No land shall be subdivided for residential or commercial use which is held unsuitable for such use by the Board of Trustees, upon the recommendation of the Plan Commission, for reason of flooding, inadequate drainage, unfavorable topography or any other feature likely to be harmful to the health, safety, or welfare of the future residents of the proposed subdivision or of the community. The Board of Trustees, in applying the provisions of this Section, shall in writing recite the particular facts upon which it bases its conclusion that the land is not suitable for residential use and afford the subdivider an opportunity to present evidence regarding such unsuitability if he/she so desires. Thereafter the Board of Trustees, upon the recommendation of the Plan Commission, may affirm, modify, or withdraw its determination of unsuitability.

(b) Existing Flora. The subdivider shall make every effort to protect and retain all existing trees, shrubbery, vines, and grasses not actually lying in public roadways, drainageways, building foundation sites, private driveways, soil absorption waste disposal areas, paths, and trails. Such trees are to be protected and preserved during construction in accordance with sound conservation practices, possibly including the preservation of trees by well islands or retaining walls whenever abutting grades are altered, pursuant to a landscaping plan filed by the subdivider.

Sec. 54.42 Condominium Developments.

(a) Purpose.

(1) The Board of Trustees hereby finds that certain issues arise in condominium developments that require limited applicability of this chapter to condominium developments. The State Legislature has recognized that subdivision ordinances may apply to condominiums but that subdivision ordinances shall not impose burdens upon condominiums that are different from those imposed on other property of a similar character not subject to a declaration of condominium.

(2) The factor that makes this chapter applicable to a condominium development is the creation of multiple, distinct property entities at or near the ground surface, subject to property taxation as separate "parcels," with each property entity having different ownership and management. The Village determines that this factor makes a condominium development dissimilar, both physically and in ownership, from developments in which the land and improvements are under unitary ownership, management, and control.

(3) Thus, the Board of Trustees hereby finds that new condominium developments can place impacts on community resources in the same manner as other new developments which are characterized by division of land into lots. These impacts include:

a. Additional population density.

b. Possibility of use of particular land in a manner unsuit-

able to the land's characteristics.

c. Additional demands upon Village area parks, recreation areas and utility facilities.

d. Additional traffic and street use.

(b) Exceptions. This Section shall not apply to the following condominiums:

(1) Any condominium plat recorded prior to the effective date of this chapter.

Sec. 54.43 Miscellaneous Provisions.

(a) Dedications.

(1) Effect of Recording on Dedications. When any plat is certified, signed, acknowledged and recorded as prescribed by Chapter 236, Wisconsin Statutes, every donation to grant to the public or any person, society or corporation marked or noted as such on said plat shall be deemed a sufficient conveyance to vest the fee simple of all parcels of land so marked or noted, and shall be considered a general warranty against such donors, their heirs and assigns to the said donees for their use for the purposes therein expressed and no other; and the land intended for the streets, alleys, ways, commons or other public uses as designated on said plat shall be held by the Village, in which said plat is situated in trust to and for such uses and purposes.

(2) Dedications to Public Accepted by Approval. When a final plat of a subdivision has been approved by the Village and all other required approvals are obtained and the plat is recorded, such approval shall constitute an acceptance for the purpose designated on the plat of the uses of all lands shown thereon as dedicated to the public, including street dedications.

(b) Adoption of More Restrictive Provisions. To accomplish the purposes of this chapter, inasmuch as the Village has established the Plan Commission, the Board of Trustees pursuant to Sec. 236.45, Wisconsin Statutes, adopts additional platting requirements which are deemed more restrictive than the general provisions of said statutes and no plat shall be approved by the Board of Trustees, nor shall the same be entitled to be recorded unless said plat complies with such additional requirements as may appear in this chapter.

(c) Inspection of Public Improvements within Subdivision. All required land improvements to be installed under the provisions of this chapter shall be subject to inspection at all times by the Village Engineer or other authorized person and no underground improvements shall be covered unless this subdivider, his/hers agents, servants or contractors shall have first obtained permission to cover any underground installation from the department authorized to make such inspection.

(d) Zoning Permit. No zoning permit shall be issued by any governing official for the construction of any building, structure or improvement to land or any lot within a subdivision or other land division as defined herein which has been approved for platting or dividing until all requirements of this chapter have been fully complied with and until a contract has been awarded for the construction of all such improvements. All zoning permits shall be subject to the approval of the Zoning Administrator.

(e) Occupancy Permit. No occupancy permit shall be granted by any governing official for the use of any structure within a subdivision approved for platting or replatting until required utility and public improvement facilities have been installed, made ready to service the property and approved by the Village and that roadways providing access to the subject lot or lots have been constructed or are in the course of construction and are suitable for vehicular traffic.

1 **Reserved.**

OFFICIAL MAP

Sec. 54.50 Official Map

There is hereby established, as the Official Map of the Village of Sister Bay, the Map which accompanies and is made a part of this Ordinance bearing the date of March 12, 1985. This map is hereby designated as the "Official Map of the Village of Sister Bay," and all notations, references, and other information shown thereon shall be as much a part of this Ordinance as though the matters and information thereon were fully described herein. The Official Map shall show the location and extent of all platted and existing streets, highways, drainageways, parkways, parks and playgrounds, airports and airport affected areas, and historic districts within the corporate limits of the Village of Sister Bay and its extraterritorial plat approval jurisdiction as heretofore laid out, adopted and established by law, except that drainageways outside the Village limits shall not be included on the Official Map.

Sec. 54.51 Changes and Additions

(a) Changing Map. The Board of Trustees may change or add to the Official Map so as to establish the exterior lines of; widen; narrow; extend; or close any platted, existing, proposed, or planned streets, highways, drainageways, parkways, and parks or playgrounds, except that drainageways outside the Village limits shall not be included on the Official Map.

(b) Referral to Plan Commission. The Board of Trustees shall refer any change or addition to the Official Map to the Village Plan Commission for review and report thereon prior to adoption. The Village Plan Commission shall report its recommendation to the Board of Trustees within 60 days.

(c) Public Hearing. A public hearing of parties in interest and citizens before the Board of Trustees shall be required before any changes or additions to the Official Map are effective. Notice of the public hearing shall be published as a Class 2 notice pursuant to Chapter 985 of the Wisconsin Statutes.

(d) Changes Not Requiring a Hearing. Changes and additions made by duly approved subdivision plats shall not require a public hearing if the changes or additions do not affect any land outside the area being platted.

Sec. 54.52 Zoning Permits

(a) Zoning Permits Required. For the purpose of preserving the integrity of the Official Map, a zoning permit shall be required for any structure or part thereof that shall hereafter be located, erected, moved, reconstructed, extended, enlarged, converted, or structurally altered. No permit shall hereafter be issued for any building in any existing or proposed street, highway, drainageway, or parkway shown on the Official Map. No permit for the erection of any building shall be issued unless a street or highway giving access to such proposed structure has been duly placed on the Map.

(b) Surveys Required. The Zoning Administrator may require each applicant for a building permit to submit a plan, prepared and certified by a registered land surveyor, showing accurately the location of any proposed building with reference to any street, highway, drainageway, or parkway shown on the Official Map.

Sec. 54.53 Municipal Improvements

No public water, sewer or other municipal utility or improvement shall be constructed in any street, highway, or parkway within the jurisdictional area of this Ordinance until such street, highway, or parkway is duly placed on the Official Map.

Sec. 54.54 Appeals

The Board of Zoning Appeals shall have the power to review any administrative decision of the Village Zoning Administrator to deny a permit for the erection of a structure under this Ordinance and to grant relief from the requirements of this Ordinance under the provisions of Sections 62.23(6)(e), (f), and (g) of the Wisconsin Statutes.

Sec. 54.55 Certified Copy of Map

There shall be a certified copy of the Official Map described in Section 54.50. The certified copy shall be kept in the office of the Village Clerk, and shall be available for inspection by any interested person during regular office hours. The certified copy shall bear on its face a certification that it is a true copy of the Official

Map described in and accompanying this Ordinance and shall show the date of adoption of this Ordinance and shall be signed by the President and countersigned by the Village Clerk. Thereafter no change or addition to such Official Map shall become effective until it shall have been indicated by the appropriate convention on the aforesaid certified copy of the Official Map and a certificate placed thereon or attached thereto bearing the number and date of adoption of the amending ordinance. The certificate shall be signed by the President and countersigned by the Village Clerk.

Sec. 54.56 Map to be Filed with Register of Deeds

The Village Clerk shall be responsible immediately upon adoption of the Official Map or any amendment thereto for recording a true copy of the Official Map, as adopted or amended, with the Register of Deeds of the County of Door, Wisconsin.

Sec. 54.57 Enforcement

It shall be the duty of the Village Zoning Administrator to enforce the provisions of this Ordinance.

(a) Zoning Permit. No zoning permit shall be issued by any governing official for the construction of any building, structure or improvement to land or any lot within a subdivision or other land division as defined herein which has been approved for platting or dividing until all requirements of this chapter have been fully complied with and until a contract has been awarded for the construction of all such improvements. All zoning permits shall be subject to the approval of the Zoning Administrator.

(b) Occupancy Permit. No occupancy permit shall be granted by any governing official for the use of any structure within a subdivision approved for platting or replatting until required utility and public improvement facilities have been installed, made ready to service the property and approved by the Village and that roadways providing access to the subject lot or lots have been constructed or are in the course of construction and are suitable for vehicular traffic.

1 **Reserved.**

PLAT REVIEW AND APPROVAL

Sec. 54.60 Preliminary Consultation.

Before filing of an application for the approval of a Preliminary Plat or certified survey map, the subdivider shall submit a conceptual plan and consult with the Village Engineer and the Zoning Administrator for advice regarding general subdivision requirements. Information on meeting dates, agenda deadlines and filing requirements may be obtained from the Zoning Administrator. The conceptual plan would show the relationship of the proposed subdivision or certified survey map to traffic arteries and existing community facilities. This consultation is intended to inform the subdivider of the purpose and objectives of these regulations, the Comprehensive Plan, comprehensive plan components and plan implementation devices of the Village and to otherwise assist the subdivider in planning his/hers development. This step does not require formal application, fee or filing of a plat with the Plan Commission or Board of Trustees but may include a preliminary sketch.

Sec. 54.61 Submission of Preliminary Plat.

(a) Submission.

(1) Required. Any person contemplating the subdivision of land within the Village, before submitting a final plat for approval shall be required to file with the Zoning Administrator for filing with the Village Clerk at least 14 days prior to a regular meeting of the Plan Commission, the number of prints specified by the Zoning Administrator of a preliminary plat conforming to the Master Plan, Official Map and the Subdivision Design Standards of this chapter.

(2) Official Filing. The submission of the prints of the preliminary plat shall constitute official filing and the Village Clerk shall note on each print the date filed and shall forthwith forward copies to the following:

a. Four copies to the Supervisor of the Plat Review Unit in the Department of Administration.

b. Six copies to the County.

c. One copy for the official file.

d. Seven copies for the Plan Commission file.

e. Four copies to the Zoning Administrator for distribution to other departments for their review and comment.

(b) Plans and Specifications. Subsequent to Plan Commission approval, the owner shall file with the Village Engineer three copies of plans and specifications for public improvements required by this chapter. The Village Engineer shall examine the plat or map and final plans and specifications of public improvements for technical details and, if he/she finds them satisfactory, shall so certify in writing to the Plan Commission. If the plat or map or the plans and specifications are not satisfactory, the Village Engineer shall return them to the owner and so advise the Plan Commission.

(c) Proof of Ownership. A title insurance policy or a commitment for title insurance, and an accepted offer-to-purchase shall be submitted to the Zoning Administrator.

(d) Filing Fees. A filing fee shall be paid in accord with the Municipal Code.

(e) Affidavit. The surveyor preparing the Preliminary Plat shall certify on the face of the plat that it is a correct representation of all existing land divisions and features and that he/she has fully complied with the provisions of this chapter.

(f) Street Plans and Profiles. The subdivider shall provide street plans and profiles showing existing ground surface, and proposed and established street grades, including extensions for a reasonable distance beyond the limits of the proposed subdivision when requested.

(g) Soil Testing. Upon the request of the Plan Commission or Village Engineer, the subdivider shall provide a preliminary soils report, listing the types of soil in the proposed subdivision, their effect on the subdivision and a proposed soil testing and investigation program. Pursuant to the public policy concerns prescribed in Section 54.41, [See page 5] above the Village Engineer may require that borings and soundings be made in specified areas to

ascertain subsurface soil, rock and water conditions, including depth to bedrock and depth to ground water table.

Referral to Other Agencies and Utilities.

(1) Utilities. The subdivider shall also forward a copy to the local electric, cable TV and telephone utilities.

(2) County and State Agencies. The Village Clerk shall, within two days after the filing of the Preliminary Plat, transmit an adequate number of copies to the Plan Commission, copies to the County Planning Department and copies to the Supervisor of the Plat Review Unit in the Wisconsin Department of Administration who may retransmit to the Wisconsin Department of Transportation if the subdivision abuts or adjoins a state trunk highway or a connecting street and the Wisconsin Department of Industry, Labor and Human Relations if the subdivision is not served by the public sewer and provision for such service has not been made. The County Planning Department, the Wisconsin Department of Administration, the Wisconsin Department of Development, the Wisconsin Department of Transportation and the Wisconsin Department of Industry, Labor and Human Relations shall be hereinafter referred to as objecting agencies. The Zoning Administrator shall also transmit a copy of the Preliminary Plat to other affected Village departments for their review and recommendations concerning matters within their jurisdiction.

(3) Action by Outside Agencies. Within 20 days of the date of receiving the copies of the Preliminary Plat, any state or county agency having authority to object under Subsection (e)(2) above shall notify the subdivider and all approving or objecting authorities of any objection based upon failure of the plat to comply with the statutes or rules which its examination is authorized to cover, or, if all objections have been satisfied, it shall so certify on the face of a copy of the plat and return that copy to the approving authority from which it was received. The plat shall not be approved or deemed approved until any objections have been satisfied. If the objecting agency fails to act within the 20 day limit, it shall be deemed to have no objection to the plat. The recommendations of Village departments shall also be transmitted to the Plan Commission within 20 days from the date the plat is filed.

Sec. 54.62 Preliminary Plat Review and Approval.

(a) Official Approval. The Plan Commission shall, within 90 days of the submission of the preliminary plat to said body, review the plat and negotiate with the subdivider on changes deemed advisable, and approve, approve conditionally or reject the plat. The subdivider and his/hers surveyor shall be notified in writing of any conditions of approval or the reasons for rejections. Pursuant to Sec. 236.12, Wisconsin Statutes no approval shall be granted until it has been certified that there is no objection to the plat by any agency authorized to object.

Additional Filing.

(1) Nothing herein contained shall prohibit the filing of additional preliminary plats regardless of whether the first one has been approved.

(2) The subdivider may resubmit to the Village Clerk corrected copies of the rejected plat.

(3) Effect of Preliminary Plat Approval. Approval or conditional approval of a Preliminary Plat shall not constitute automatic approval of the Final Plat. Conditional approval may be granted subject to satisfactory compliance with pertinent provisions of this chapter and Chapter 236, Wisconsin Statutes The Preliminary Plat shall be deemed an expression of approval or conditional approval of the layout submitted as a guide to the preparation of the Final Plat, which will be subject to further consid-

eration by the Plan Commission and Board of Trustees at the time of its submission.

(b) Preliminary Plat Amendment. Should the subdivider desire to amend the Preliminary Plat as approved, he/she may resubmit the amended plat which shall follow the same procedure outlined herein, unless the amendment is, in the opinion of the Plan Commission, of such scope as to constitute a new plat, in which such case it shall be refiled.

Sec. 54.63 Final Plat Review and Approval.

(a) Filing Requirements.

(1) The subdivider shall prepare a Final Plat in accordance with this chapter; and upon installation of the public improvements required for the subdivision, and upon acceptance of said improvements by the Village Engineer, shall file 22 copies of the Plat and the application with the Village Clerk at least 14 days prior to the meeting of the Plan Commission at which action is desired. A written transmittal letter shall identify all substantial changes that have been made to the plat since the Preliminary Plat. When the subdivider expects the Village to act as the transmitting authority in accordance with Sec. 236.12, Wisconsin Statutes, the application shall state that transmittal responsibilities lie with the Village and shall contain a list of the other authorities to which the plat must be subjected and shall be accompanied by such additional fees and copies of the plat as are necessary to be transmitted to such authorities.

(2) If the Village is acting as the transmitting authority, the Village Clerk shall, within two days after filing, transmit copies to the County Planning Department, copies to the Supervisor of the Plat Review Unit in the Wisconsin Department of Administration for them and for their retransmission of copies to the Wisconsin Department of Transportation if the subdivision abuts or adjoins a state trunk highway or a connecting street and the Wisconsin Department of Industry, Labor and Human Relations if the subdivision is not served by a public sewer and provision for service has not been made, to all affected Village boards, commissions and committees and the original Final Plat and adequate copies to the Plan Commission. The County Highway Department, the Wisconsin Department of Agriculture, Trade and Consumer Protection, the Wisconsin Department of Transportation, and the Wisconsin Department of Industry, Labor and Human Relations shall be hereinafter referred to as objecting agencies.

(3) The Final Plat shall conform to the Preliminary Plat as approved and to the requirements of all applicable ordinances and state laws and shall be submitted for certification of those agencies having the authority to object to the plat as provided by Sec. 236.12(2), Wisconsin Statutes

(4) The Village Clerk shall refer 11 copies of the Final Plat to the Plan Commission for the Zoning Administrator and for distribution to other Village departments. The recommendations of the Plan Commission shall be made within 30 days of the filing of the Final Plat.

(5) A filing fee shall be paid in accordance with the Municipal Code.

(b) Plan Commission Review.

(1) The Plan Commission shall examine the Final Plat as to its conformance with the approved Preliminary Plat, any conditions of approval of the Preliminary Plat, this chapter and all applicable ordinances, rules, regulations, comprehensive plans and comprehensive plan components which may affect it and shall recommend approval, conditional approval or rejection of the Plat to the Board of Trustees.

(2) The objecting state and county agencies shall, within 20 days of

the date of receiving their copies of the Final Plat, notify the subdivider and all other approving and objecting agencies of any objections. If there are no objections, they shall so certify on the face of the copy of the Plat and shall return that copy to the Village. If an objecting agency fails to act within 20 days, it shall be deemed to have no objection to the Plat.

(3) The Plan Commission shall, within 30 days of the date of filing of the Final Plat with the Village Clerk, recommend approval, conditional approval or rejection of the Plat and shall transmit the Final Plat and application along with its recommendations to the Board of Trustees. The Plan Commission may hold the matter in abeyance if there is incomplete or inadequate information.

Board of Trustees Review and Approval.

(4) The Board of Trustees shall, within 60 days of the date of filing the original Final Plat with the Village Clerk, approve or reject such Plat unless the time is extended by agreement with the subdivider. If the Plat is rejected, the reasons shall be stated in the minutes of the meeting and a written statement of the reasons forwarded to the subdivider. The President and Village Clerk may not inscribe their approval on the Final Plat unless the Village Clerk certifies on the face of the Plat that the copies were forwarded to objecting agencies as required herein, the date thereof and that no objections have been filed within 20 days or, if filed, have been met.

(5) The Board of Trustees shall, when it determines to approve a Final Plat, give at least ten days' prior written notice of its intention to the Municipal Clerk of any municipality within 1,000 feet of the Final Plat, but failure to give such notice shall not invalidate any such plat.

(6) Failure of the Board of Trustees to act within 60 days, the time having not been extended and no unsatisfied objections having been filed, the plat shall be deemed approved.

(c) Recordation. After the required improvements have been installed and the Final Plat has been approved by the Board of Trustees, the Village Clerk shall cause the certificate inscribed upon the Plat attesting to such approval to be duly executed and the Plat returned to the subdivider for recording with the County Register of Deeds. The Register of Deeds cannot record the Plat unless it is offered within six months from the date of Preliminary Plat approval or 30 days after the date of Final Plat approval. Recording fees shall be paid by the subdivider.

(d) Final Copies. The subdivider shall file ten copies of the Final Plat as approved with the Village Clerk for distribution to the approving agencies, affected utilities and other affected agencies for their files. The subdivider shall provide to the Village Engineer a digital file in an acceptable format that contains the plat.

(e) Partial Platting. The Final Plat may, if permitted by the Board of Trustees, constitute only that portion of the approved Preliminary Plat which the subdivider proposes to record at the time.

(f) Optional Processing Procedure. Where the developer chooses to follow the optional procedure in processing the plat as provided by Sec. 236.12, Wisconsin Statutes, the Village Clerk and Plan Commission shall modify their procedure and the wording of the necessary certificate and approval accordingly.

Sec. 54.64 Replat.

(a) Except as provided in Section 70.27(1), Wisconsin Statutes, when it is proposed to replat a recorded subdivision, or part thereof, so as to change the exterior boundaries of a recorded subdivision, or part thereof, the applicant or person wishing to replat shall vacate or alter the recorded Plat as provided in Sections 236.40 through 236.44 of the Wisconsin Statutes. The applicant or person wishing to replat shall then proceed, using the approval procedures for Preliminary and Final Plats prescribed in this chapter.

(b) Whenever an approved Final Plat is submitted for re-proved plat, and which has

not been recorded with the Register of Deeds, said plat shall be reapproved by the Board of Trustees. No Final Plats shall be reapproved by the Board of Trustees following the expiration of the six month period. Such plats shall be submitted as a new plat. All previous approvals shall be null and void and shall have no further bearing on the subsequent review and approval of the plat by the Village.

Sec. 54.65 Determination of Adequacy of Public Facilities and Services.

(a) A Preliminary Plat, Final Plat or certified survey map shall not be approved unless the Plan Commission and the Board of Trustees determine that adequate public facilities and public services will be available to meet the needs of the proposed land division and that no public funds other than those already provided in an adopted capital or operating budget are required; the Board of Trustees, at its discretion, may waive this provision if the Board of Trustees agrees to use bonding or other means of financing for the project.

(b) The applicant shall furnish any data requested by the Zoning Administrator who shall transmit this information to the appropriate commission(s), committee(s) and staff for review; the Zoning Administrator shall act as coordinator of the reports from staff to the Plan Commission and Board of Trustees on the adequacy of water, sanitary and storm sewers, fire service, parks and open space and recreation facilities and transportation facilities.

(c) Public facilities and public services for a proposed land division may be found to be adequate when the following conditions exist:

(1) The proposed land division is located in a sanitary sewer service area where adequate sanitary sewer service is presently available for extension, under construction or designated by the Board of Trustees for extension of sewer service within the current capital budget year and funds are specifically provided for such extension either from public or private financing. The Plan Commission and the Board of Trustees shall consider the recommendations of the Village Engineer, Utility Commission, and the appropriate committee(s) on the capacity of trunk lines and of sewerage treatment facilities and any other information presented.

(2) The proposed land division is located within a service area contiguous to an arterial transmission water main of adequate capacity for the proposed development or if the water distribution system that is needed is under construction or scheduled for construction within the current budget year, and funds, either public or private, are available for the program. The Plan Commission and the Board of Trustees shall consider the recommendations from the Village's Utility Commission, Village Engineer, and the appropriate committee(s) on line capacities, water sources and storage facilities, as well as any other information presented.

(3) The Village Administrator verifies to the Board of Trustees that adequate funds, either public or private, are available to insure the installation of all necessary storm water management facilities.

(4) The Village Administrator can demonstrate to the Plan Commission and the Board of Trustees that street maintenance and refuse collection services, either public or private, are so situated that adequate and timely service can be provided so as not to involve danger or injury to the health, safety or general welfare to the future residents of the proposed land division or existing Village residents.

(5) The Plan Commission verifies that the future residents of the proposed land division can be assured park, recreation and open space facilities and services which meet the standards of the Village's Comprehensive Plan.

(6) The Fire Department verifies that timely and adequate service can be provided to the residents.

(7) The proposed land division is accessible by existing or officially mapped, publicly maintained, all-weather roadway system, adequate to accommodate both existing traffic and that traffic to be generated by the proposed land division in accordance with the Official Map and Village Standards.

(d) Where the Plan Commission and the Board of Trustees determine that one or more public facilities or services are not adequate for the proposed development, but that a portion of the area could be served adequately, or that careful phasing of the development could result in all public facilities and public services being adequate, conditional approval may include only such portions or may specify phasing of the development.

(e) No land shall be divided which has been officially mapped as a public lands storm water management facility or is determined by the Board of Trustees to be unsuitable for use by reason of flooding, bad drainage, severe erosion potential or unfavorable topography, or any other feature likely to be harmful to health, safety or welfare of future residents or landowners in the proposed land division or of the community.

(f) If the proposed improvements or project are located outside the corporate limits of the Village and seek to connect to the sanitary sewer or water systems, then the Utility Commission shall review the preliminary engineering calculations and determine if the proposed improvements or project have an impact on the existing water or sanitary sewer system. The Village Engineer shall evaluate the preliminary engineering calculations submitted to the Utility Commission and report in writing as to the impact on the system and the adequacy of the system to serve. The Utility Commission will submit a report and recommendation to the Plan Commission and Board of Trustees for their consideration. The construction of system improvements outside the corporate limits of the Village shall be under the control of the Liberty Grove Sanitary District #1 and/or the Town of Liberty Grove as modified by the agreements between the District, Town and the Village.

TECHNICAL REQUIREMENTS FOR PLATS AND CERTIFIED SURVEYS

Sec. 54.80 Technical Requirements for Preliminary Plats.

(a) General. A Preliminary Plat shall be required for all subdivisions and shall be based upon a survey by a registered land surveyor and the plat prepared and submitted on Mylar or paper of good quality at a scale of not more than 100 feet to the inch and shall show correctly on its face the following information:

(1) Title under which the proposed subdivision is to be recorded, which name shall not duplicate or be alike in pronunciation of the name of any plat heretofore recorded in the Village unless considered an addition to the subdivision.

(2) Legal description/location of the proposed subdivision by government lot, quarter section, township, range, county and state.

(3) Date, scale and north point.

(4) Names, telephone numbers, and addresses of the owner, and any agent having control of the land, engineer, subdivider, Registered Land Surveyor preparing the plat.

(5) Entire area contiguous to the proposed plat owned or controlled by the subdivider may be required by the Plan Commission to be included on the Preliminary Plat even though only a portion of said area is proposed for immediate development. Where a subdivider owns or controls adjacent lands in addition to those proposed for development at that time, he/she shall submit a concept plan for the development of the adjacent lands showing streets, utilities, zoning districts and other information as may affect the review of the Preliminary Plat in question. The Village Engineer may waive these requirements where adjacent development patterns have already been established.

(b) Plat Data. Survey information required below off of the subject parcel or property may be obtained from mapping sources acceptable to Door County. All Preliminary Plats shall show the following:

(1) Exact length and bearing of the exterior boundaries of the proposed subdivision referenced to two different corners established in the U.S. Public Land Survey and the total acreage encompassed therein.

(2) Locations of all existing property boundary lines, structures, drives, streams and water courses, marshes, rock outcrops, wooded areas and other significant features within the tract being subdivided or immediately adjacent thereto.

(3) Location, right-of-way width and names of all existing streets, alleys or other public ways, easements and utility rights-of-way and all section and quarter section lines within the exterior boundaries of the plat or immediately adjacent thereto.

(4) Location and names of any adjacent subdivisions, parks and cemeteries and owners of record of abutting unplatted lands.

(5) Type, width and elevation of any existing street pavements within the exterior boundaries of the plat or immediately adjacent thereto, together with any legally established centerline elevations.

(6) Location, size and invert elevation of any existing or adjoining sanitary or storm sewers, culverts and drain pipes, the location of manholes, catch basins, hydrants, electric and communication facilities, whether overhead or underground and the location and size of any existing water and sewer mains within the exterior boundaries of the plat or immediately adjacent thereto. If no sewers or water mains are located on or immediately adjacent to the tract, the nearest such sewers or water mains which might be extended to serve the tract shall be indicated by the direction and distance from the tract, size and invert elevations.

(7) Corporate limit lines within the exterior boundaries of the plat or immediately adjacent thereto.

(8) Existing zoning on and adjacent to the proposed subdivision.

(9) Source of domestic water supply and type of sewage disposal, locations of sites for community domestic water plant and/or community sewage treatment plant are all subject to rules and regulations of the State Department of Health.

(10) Contours at vertical intervals of not more than five feet where the slope is greater than ten percent (10%) and not more than two feet where the slope is less than ten percent (10%). Elevations shall be referenced to National Geodetic Vertical Datum of 1929 (NGVD-29).

(11) Profiles showing existing ground surface and proposed street grades, including extensions for a reasonable distance beyond the limits of the proposed subdivision. Elevations shall be referenced to National Geodetic Vertical Datum of 1929 (NGVD-29).

(12) A draft of a protective covenant whereby the subdivider proposes to regulate land use in the subdivision and otherwise protect the proposed development.

(13) High-Water Elevation of all ponds, streams, lakes, flowages and wetlands within the exterior boundaries of the plat or located within 100 feet there from.

(14) Water elevation and exact boundaries of all ponds, streams, lakes, flowages and wetlands within the exterior boundaries of the plat or located within 100 feet there from at the date of the survey.

(15) Floodland and shoreland boundaries of the 100 year recurrence interval flood or, where such data is not available, the maximum flood of record within the exterior boundaries of the plat or within 100 feet there from.

(16) Location and results of percolation tests within the boundaries of the plat conducted in accordance with Sec. H 85.06 of the Wisconsin Administrative Code where the subdivision will not be served by public sanitary sewer service, when allowed by the Village.

(17) Location, width and names of all proposed streets and public rights-of-way such as alleys and easements.

(18) Approximate dimensions of all lots together with proposed lot, or lot and block, numbers. The area in square feet of each lot shall be provided.

(19) Location and approximate dimensions of any sites to be reserved or dedicated for parks, playgrounds, drainageways or other public use or which are to be used for group housing, shopping centers, church sites or other nonpublic uses not requiring lotting.

(20) Approximate radii of all curves.

(21) Any proposed lake and stream access with a small drawing clearly indicating the location of the proposed subdivision in relation to access.

(22) Any proposed lake and stream improvement or relocation, and notice of application for approval by the Army Corps of Engineers or Department of Natural Resources, when applicable.

(23) Soil tests and reports as may be required by the Village Engineer for the design of roadways, storm drainage facilities, on-site sewage disposal systems, erosion control facilities, and/or other subdivision improvements and features.

(24) Setbacks and building lines for each lot consistent with the pertinent requirements of the Village Zoning Code.

(25) Design Features.

a. Locations and widths of proposed alleys, pedestrian ways and utility easements.

b. Layout numbers and preliminary acreages and dimensions of lots and blocks.

c. Minimum front, rear, side, and street yard building setback lines.

d. Location and size of proposed sanitary sewer lines and water mains.

e. Gradients of proposed streets, sewer lines (and water mains, if required).

f. Areas, other than streets, alleys, pedestrian ways and utility easements, intended to be dedicated or reserved for public use, including the size of such area or areas in acres.

g. Location and description of survey monuments.

h. An identification system for the consecutive numbering of all blocks and lots within the subdivision.

i. Sites, if any, to be reserved for parks or other public uses.

j. Sites, if any, for multi-family dwellings, shopping areas, churches or other non-public uses exclusive of single-family dwellings.

k. Provisions for surface water management including both minor and major system components, detention/retention facilities, including existing and post development 100 year flood elevations, etc.

l. Potential re-subdivision and use of excessively deep [over 200 feet] or oversized lots must be indicated in a satisfactory manner to the Village Engineer.

m. Any wetlands, floodplains, or environmentally sensitive areas provided for by any local, state or federal law.

n. Locations of holding tanks and septic fields.

o. All easements as required by Section 54.112.

(26) Where the Zoning Administrator or Village Engineer finds that it requires additional information relative to a particular problem presented by a proposed development in order to review the Preliminary Plat, it shall have the authority to request in writing such information from the subdivider.

Sec. 54.81 Technical Requirements for Final Plats.

(a) General. A Final Plat prepared by a registered land surveyor shall be required for all subdivisions. It shall comply in all respects with the requirements of Section 236.20, Wisconsin Statutes, and this chapter.

(b) Additional Information. The Final Plat shall show correctly on its face, in addition to the information required by Section 236.20, Wisconsin Statutes, the following:

(1) Exact Length and Bearing of the center line of all streets.

(2) Exact Street Width along the line of any obliquely intersecting street.

(3) Exact Location and Description of street lighting and lighting utility easements.

(4) All Lands Reserved for future public acquisition or roads of easements or reserved for the common use of property owners within the Plat.

(5) Special Restrictions required by the Board of Trustees, upon the recommendation of the Plan Commission; such as, but not limited to, items relating to access control along public ways or to the provision of planting strips.

(6) Taxes. Certifications by attached information showing that all taxes, special assessments or other outstanding charges currently due on the property to be subdivided have been paid in full.

(7) Dimensions of Lot Lines shall be shown in feet and hundredths; no ditto marks shall be permitted. When lot lines are not at right angles to the street right-of-way line, the width of the lot shall be indicated in the narrowest portion of the buildable area in addition to the frontage of the lot at the street right-of-way line.

(8) A Numbered Identification System for all lots and blocks.

(c) Deed Restrictions. Restrictive covenants and deed restrictions for the proposed subdivision shall be filed with the Final Plat and recorded.

(d) Property Owners Association. The legal instruments creating a property owners association for the ownership and/or maintenance of common lands in the subdivision shall be filed with the Final Plat.

(e) Street Dedication. Public rights-of-way for streets and other public areas shall be dedicated to the Village with Final Plat approval. Such dedications shall require the owner's certificate and the mortgagee's certificate in substantially the same form as required by Sec. 236.21 (2)(a), Wisconsin Statutes

Survey Accuracy.

(1) Examination. The Board of Trustees and Plan Commission, or their designees, shall examine all Final Plats within the Village and may check for the accuracy and closure of the survey, the proper kind and location of monuments, and legibility and completeness of the drawing.

(2) Maximum Error of Closure. Maximum error of closure before adjustment of the survey of the exterior boundaries of the subdivision shall not exceed, in horizontal distance or position, the ratio of one part in five thousand (1:5,000), nor in azimuth, four seconds of arc per interior angle. If field measurements exceed this maximum, new field measurements shall be made until a satisfactory closure of the field measurements has been obtained; the survey of the exterior boundary shall be adjusted to form a closed geometric figure.

(3) Street, Block and Lot Dimensions. All street, block and lot dimensions shall be computed as closed geometric figures based upon the control provided by the closed exterior boundary survey. If checks disclose an error for any interior line of the plat greater than the ratio of one part in three thousand (1:3,000), or an error in measured angle greater than one minute of arc for any angle where the shorter side forming the angle is 300 feet or longer, necessary corrections shall be made. Where the shorter side of a measured angle is less than 300 feet in length, the error shall not exceed the value of one minute multiplied by the quotient of 300 divided by the length of the shorter side; however, such error shall not in any case exceed five minutes of arc.

(4) Plat Location. Where the plat is located within a quarter section, the corners of which have been relocated, monumented and coordinated by the Village, the tie required by Section 236.20(3)(b), Wisconsin Statutes, may be expressed in terms of grid bearing and distance and Wisconsin state plane coordinates of the monument marking the relocated section or quarter corner to which the plat is tied shall be indicated on the plat. The grid bearing and distance of the tie shall be determined by a closed survey meeting the error of closure herein specified for the survey of the exterior boundaries of the subdivision.

(f) Surveying and Monumenting. All Final Plats shall meet all the surveying and monumenting requirements of Section 236.15, Wisconsin Statutes

(g) State Plane Coordinate System. Where the plat is located within a quarter-section, the corners of which have been relocated, monumented and coordinated by the Village, the plat shall be tied directly to two of the section or quarter corners so relocated, monumented and coordinated. The exact grid bearing and distance of such tie shall be determined by field measurements, and Wisconsin state plane coordinates of the monument marking the relocated section or quarter corner to which the plat is tied shall be indicated on the plat. All distances and bearings shall be referenced to the Wisconsin Coordinate System, Central Zone, and adjusted to the Village's control survey.

(h) Certificates. All Final Plats shall provide all the certificates required by Section 236.21, Wisconsin Statutes; and in addition, the

surveyor shall certify that he/she/she has fully complied with all the provisions of this chapter.

(i) Notes: All Final Plats shall contain such notes relevant to restrictions on the use of the lots created.

Sec. 54.82 Requirements for Certified Survey Maps.

(a) Map Preparation. A certified survey map prepared by a registered land surveyor shall be required for all land divisions not created by a subdivision plat. It shall comply in all respects with the applicable requirements of Sec. 236.20, Wisconsin Statutes, and this chapter.

(b) Required Improvements. The provisions of Sections 54.100 to 54.115 [See page 22] shall be applicable to certified survey maps.

(c) Other Requirements. All certified survey maps shall be subject to all other applicable provisions set forth in this chapter for subdivision plats.

(d) Dedication of Streets and Granting of Easements. As a condition of approving a certified survey map, the Village may require the dedication of public streets as shown on the Official Map and the granting of easements for public utilities or public facilities.

REQUIRED IMPROVEMENTS

Sec. 54.100 Improvements Required.

(a) General Requirement.

(1) In accordance with the authority granted by Sec. 236.13 of the Wisconsin Statutes, the Village hereby requires that the subdivider shall install all public improvements required by this chapter prior to approval of the Final Plat. As a further condition of approval, the Board of Trustees hereby requires that the subdivider be responsible for the cost of any necessary alterations of any existing utilities which, by virtue of the platting or certified survey map, fall within the public right-of-way.

(2) As a condition for the acceptance of dedication of public rights-of-way, the Village requires that the public ways have been previously provided with all necessary facilities constructed to Village specifications, including, but not limited to, sewerage, storm drainage, water mains and services, grading and improvement of the streets and other public ways, sidewalks, street signing, street lighting and such other facilities required by the Board of Trustees or that a specific portion of the costs be paid in advance as provided in Sec. 66.54(3), Wisconsin Statutes

(b) General Standards. The required public improvements shall be installed in accordance with the engineering standards and specifications which have been established by the Village Engineer and adopted by the Board of Trustees. The improvements shall be made in accordance with established engineering practices, approved prior to the start of construction by the Village Engineer. The "Engineering Design Manual" is the principal source that establishes the requirements. When new or revised standards and/or specifications have been adopted by the Village, work on public improvements not begun within 12 months of the date of the development agreement shall be made to the new or revised standards and/or specifications. The Village Engineer shall review and approve the construction plans, specifications and calculations for the construction of the required public improvements.

(c) Project Manager. The subdivider shall designate a project manager who shall be readily available on the project site during the construction of the required public improvements. The project manager shall be granted authority on behalf of the subdivider to make decisions related to the construction of the required public improvements as they may arise during the course of the construction. The project manager shall also be responsible for the scheduling and coordination of the required work to construct the required improvements. Correspondence with or verbal orders to the designated project manager shall have the same authority as with the subdivider directly.

(d) Responsibility for Improvements. The installation of all public improvements shall either be administered by the Village Engineer through the public bidding and contracting process, or shall be by the developer under private contract, as authorized by the Board of Trustees. Payment for the cost of such installations by the owner shall be assured by the submittal of a letter of escrow, cash bond or other financial guarantee acceptable to the Village Attorney. If the work is done under private contract the developer shall pay the costs associated with inspection performed by the Village Engineer.

Sec. 54.101 Development Agreements Required for Proper Installation of Improvements.

(a) Development Agreement. The subdivider shall be required to enter into a development agreement with the Village for land division improvements, by agreeing to install the required public improvements as herein provided before the submission and final approval of any plat. The agreement form shall be provided by the Village and may provide for a phasing of public improvements construction, providing such phasing is approved by the Board of Trustees. The Village reserves the right to control the phasing through

limits, sequence, and/or additional surety so as to provide for continuity of streets, sewers, water mains, and other necessary public improvements within and between the phases.

Financial Guarantees.

(1) If the installation of public improvements is administered by the Village, the subdivider shall file, subject to the approval of the Village Attorney, a certified check, or other form of financial guarantee as approved by the Village Attorney, in an amount equal to one hundred fifteen percent (115%) of the estimate of the cost of improvements, as determined by the Village Engineer. The cost of improvements shall also include the cost of engineering design, construction management and inspection, Village administrative expenses and an amount for contingencies.

(2) The subdivider may elect to install the improvements in construction phases provided that:

a. The phases are specified in the development agreement for land division improvements;

b. A subsequent phase shall not be commenced until completion of improvements of all prior phases, except with express written authorization of the Zoning Administrator and the Village Engineer.

c. The subdivider minimize grading and other disturbances to lands included in future construction phases in order to prevent erosion; and

d. Erosion control plans and measures submitted and approved herein shall address the individual phases of construction.

(3) The time limit for completion of a phased improvement program shall take into account the needs and desires of the Village and adjacent property owners for street and other improvements to serve lands adjacent to and within the land division.

(4) As work progresses on installation of improvements constructed as part of the agreement, the Village Engineer, upon written request from the subdivider from time to time, is authorized to recommend to the Village a reduction in the amount of surety as hereinafter provided. When portions of construction (water, sanitary sewer, street, sidewalk, greenway or other improvements) are completed by the subdivider and determined acceptable by the Village Engineer, he/she is authorized, in his/hers sole discretion, upon submission of lien waivers by the sub-divider's contractors, to reduce the amount of surety. The amount of surety remaining shall be equal to one hundred twenty-five percent (125%) of the estimate of the Village Engineer of costs of work remaining to be completed and accepted and to insure performance of the one year guarantee as specified in Subsection (d) below against defects in workmanship and materials on work accepted. As a further guarantee that all obligations under contract for work on the development are satisfied, the contractor and subcontractors who are to be engaged in the construction of utilities or street improvements on the street right-of-way to be dedicated shall be prequalified for such work by the Village Engineer prior to commencing construction.

(5) The subdivider shall agree in the development agreement to pay all Village legal fees, Village engineering fees, Village administrative fees, street, bikeway and sidewalk assessments, specifically all area charges for sanitary sewer mains and all water main assessments, including where the land division abuts existing streets which are not improved within the Village standard street improvements (includ-

ing, but not limited to curb and gutter, local storm sewer, sidewalks, bikeways and an asphaltic concrete or Portland cement concrete pavement).

(b) Waiver of Special Assessment Notice and Hearing. The subdivider shall file with said agreement, subject to the approval of the Village Attorney, a waiver of special assessment notices and hearings such that the subdivider, his/hers heirs and assigns (including purchasers of property from the subdivider), waive notice and hearing for and authorize the assessment for any and all of the required public improvements in phases of the land division intended for future development in accordance with Sec. 66.60(18), Wisconsin Statutes

(c) Improvement Guarantee. If within one year after the date of final acceptance of any public improvement by the Board of Trustees (or such longer period of time as may be prescribed by laws or regulations or by the terms of any special guarantee required by the terms of said contract as may be necessary due to the phasing of the construction of public improvements), any work on any public improvement is found to be defective, the subdivider shall remove it and replace it with non-defective work in accordance with written instructions given by the Village Engineer. If the subdivider does not promptly comply with the terms of such instructions, or in an emergency where delay would cause serious risk of loss or damage, the Village may cause the removal and replacement of said defective work and charge all direct, indirect and consequential costs of such removal and replacement to the improvement guarantee instrument.

(d) Survey Monumentation. Before final approval of any plat or certified survey within the corporate limits of the Village, the subdivider shall install monuments placed in accordance with the requirements of chapter 236, Wisconsin Statutes, or as may be required by the Village Engineer. All survey monumentation located adjacent to street or public rights-of-way, but not located within street pavement, shall be protected with steel fence posts erected near the survey monumentation. When the land division includes an established one-half (1/2), one quarter (1/4), one quarter-one quarter (1/4-1/4), or other such section monument, the established monument shall be preserved and/or fully restored by the subdivider at his/hers cost.

(e) Future Public Improvements. Where the map area is located such that it is impractical to install full public improvements at the time of its development, those further improvements will be installed in future years. These may include, but not be limited to, sanitary sewer and laterals, watermain and laterals, storm sewer, storm channels, storm laterals, downstream storm drainage improvements, street paving, curb and gutter, sidewalk and street lights. The financing of the cost of said future improvements shall be accomplished by the applicable special assessment laws, regulations and rates in effect at the time of installation.

Financing of Required Public Improvements.

(1) The owner shall initially finance the full cost of the public improvements required under the agreement. As used above, the term "full cost" shall include contract, labor, equipment, material, engineering, inspection, administration and overhead charges. Where an improvement reflects oversizing, the owner shall be reimbursed by the Village, as specified in the Village's oversizing policy, for such oversizing costs advanced by him on or before the 31st day of March following the end of the calendar year in which the oversizing costs are incurred.

(2) Where a public improvement, financed by the owner, is assessed to other benefiting property owners, he/she shall be reimbursed for such assessment. Said reimbursement shall be paid by the Village to the developer in full on or before the 31st day of March following the end of the calendar year in which an immediate or deferred assessment becomes due and payable; but in no event shall such reimbursement in full by any later than ten years subsequent to the Vil-

lage's approval of the agreement, all in accordance with requirements of this Code of Ordinances.

(f) Payment of Outstanding Special Assessments. Any special assessment previously levied for public improvements fronting the map area shall be paid in accord with the respective Board of Trustees resolution authorizing said improvements and financing thereof by the special assessment process. Where authorized, such payments may be made under the installment plan.

(g) Deed Restrictions. The owner or developer shall prepare and submit, for review and approval by the Village, a draft of deed restrictions governing the proposed parcel(s). The Village shall record the Village-approved deed restrictions with the Register of Deeds of Door County, Wisconsin prior to the sale and/or the building upon, whichever occurs first, of the proposed parcels. "Developer," as used in the context of these deed restrictions, shall mean the developer, his/hers heirs, personal representatives, successors and assigns. Said restrictions shall incorporate, but not be limited to, the following provisions:

(1) A paved driveway approach, constructed to the specifications of the Village, shall be installed for each parcel within one year after the initial occupancy of the house. Such construction shall be permitted for, inspected by and approved by the Village Engineer. If the map area is located along a County or State Trunk Highway, such permit inspection and approval must be obtained from Door County or the Wisconsin Department of Transportation respectively.

(2) The property owner shall be responsible for maintaining drainage swales on each lot of the certified survey map in accord with the approved site grading plan, so as to facilitate the planned drainage patterns. The developer shall also keep all inlet grates and culverts located on or abutting his/hers property free of debris and in a condition which allows for the natural flow of storm water.

(3) The property owner shall be responsible for damage to and replacement of sewer and water laterals, water curb stop and box, underground electric and telephone cables, and all other existing improvement facilities and appurtenances thereto damaged during the period of home construction and/or lot grading or improvements as may be caused by said developer or his/hers contractors while working or traversing within the certified survey map limits or on an adjacent parcel or within the abutting street right-of-way.

(4) Prior to issuance of a zoning permit for each respective parcel, the developer, owner or builder shall obtain a driveway permit from the Village, County, or State Highway Department, for installation of a driveway culvert along the respective Village street, county road, or state highway abutting the map area. Such permit must be accompanied by the appropriate fee to the respective highway department for labor and material provided. The culvert shall be installed prior to issuance of the building permit.

(5) All electric, telephone and cable television services on the parcels shall be via underground service lines.

(6) The property owner of said parcels shall submit with his/hers building permit application a certified plat of survey indicating existing and proposed parcel corner grades, proposed house grades and lot grading in accord with the approved grading plan on file with the Village Engineer. No deviation there from shall be permitted unless approved by the Village Engineer.

(7) A permanent lawn or such plantings as approved by the landscaping plan shall be established on each parcel within one year after the issuance of the initial occupancy permit for the home on such parcel.

(8) The property owner agrees to connect the home on each parcel to the Village storm sewer system facilities within one year after such facilities are installed in the abutting street. The owner is advised that at the time of house construction, he/she may want to have the storm sewer service laterals installed on the parcel between the house and the front property line in order to expedite connection to the storm sewer facilities in the street at such time as such facilities are installed by the Village.

(9) When installed, each lot owner agrees to pay, when due, the cost of future public improvements such as, but not limited to, storm sewer and laterals, street paving and sidewalk as may be allocable to his/hers parcel.

(10) The developer, owner or builder shall provide certification from a registered land surveyor or professional engineer that the final grade along all lot lines, in the invert of all drainage swales and at other critical locations as determined by the Village Engineer, complies with the approved grading plan. Such certification shall be on a plan copy with elevations as existing so indicated. All such elevations shall be within the limits outlined in the Engineering Design Manual. If not in compliance, appropriate regrading shall be performed. Such certification shall be provided to the Village Engineer prior to his/hers recommending final plat approval.

(11) Vehicular access to one or more of the parcels may have to be limited or controlled due to unusual circumstances inherent to the map make-up, location and characteristics of the certified survey map, such as corner lots or stub street development.

Sec. 54.102 Required Construction Plans; Village Review; Inspections.

(a) Engineering Reports, Construction Plans and Specifications. Following approval of the preliminary plat by the Plan Commission, engineering reports, plans and proposed specifications shall be submitted. Construction plans for the required improvements conforming in all respects with the standards set forth in the "Engineering Design Manual" or as specified by the Village Engineer and the ordinances of the Village shall be prepared at the sub-hers seal. Such plans, together with the quantities of construction items, shall be submitted to the Village Engineer for his/hers approval. Upon approval they shall become a part of the contract required. Following approval of the preliminary plat by the Plan Commission, copies of the construction plans and specifications shall be furnished to the Village Engineer for review and approval.

(b) Action by the Village Engineer. The Zoning Administrator and the Village Engineer shall review the plans and specifications for conformance with the requirements of this chapter, the Engineering Design Manual, and other pertinent Village ordinances and design standards recommended by the Village Engineer and approved by the Board of Trustees. If the Village Engineer rejects the plans and specifications, he/she shall notify the owner, who shall modify the plans or specifications or both accordingly. When the plans and specifications are corrected, the Village Engineer shall approve the plans and specifications.

Construction and Inspection.

(1) Prior to starting any of the work covered by the plans approved above, written authorization to start the work shall be obtained from the Zoning Administrator and the Village Engineer upon receipt of all necessary permits and in accordance with the construction methods of this chapter.

(2) During the course of construction, the Village Engineer shall make such inspections as he/she or the Board of Trustees deems necessary to insure compliance with the plans and specifications as approved. The owner shall pay the actual cost incurred by the Village for such inspections. This fee shall be the actual cost to the Village of inspectors, engineers and other

parties necessary to insure satisfactory work.

(3) Construction of all improvements, as set forth in Sections 54.103 through 54.113, [See page 27] shall conform to current standards and specifications as established by the Village Engineer in the Engineering Design Manual.

(c) Record Plans. After completion of all public improvements and prior to final acceptance of said improvements, the subdivider shall make or cause to be made, three copies of record plans showing the actual "as-built" location of all valves, manholes, stubs, sewers and water mains and such other facilities as the Village Engineer shall require. These plans shall bear the signature and seal of a professional engineer registered in Wisconsin. One of the three plans shall be on Mylar or some type of plastic film. The presentation of the record plans shall be a condition of final acceptance of the improvements. Such plans shall be filed with the Village Engineer and the Zoning Administrator.

Sec. 54.103 Street, Curb and Gutter Improvements and Drainage Facilities.

The subdivider shall construct streets, roads and alleys as outlined on the approved plans based on the requirements of this chapter.

(a) General Considerations. The streets shall be designed and located in relation to existing and planned streets, to topographical conditions and natural terrain features such as streams and existing tree growth, to public convenience and safety, and in their appropriate relation to the proposed uses of the land to be served by such streets.

(b) Conform to Official Map. The arrangement, width, grade and location of all streets shall conform to the Official Map.

(c) Street Grading. The subdivider shall provide plan and profile drawings and specifications to the Village Engineer which indicates the proposed established grades of all the streets shown on the plat. The cost of such preparation shall be paid by the subdivider. After approval of these grades by the Village Engineer and Board of Trustees, the subdivider shall grade or cause to be graded the full width of the right-of-way of the proposed streets, taking into account the trees within the right-of-way, in accordance with the approved drawings and to the cross section approved by the Village Engineer. Proposed cross-section shall be in accordance with Table 54.103. The full width of the right-of-way shall also include that area between marginal access streets and major streets and shall be graded and prepared for seeding under the supervision of the Village Engineer and the Zoning Administrator. Requirements for proposed streets in zoning districts not listed in Table 54.103 [See page 27] will be set on a case-by-case basis by the Board of Trustees.

Figure 1 Table 54.103

Zoning District	Typical Street Cross-Section*	Street Lights Required	Street Trees Required
CS-1	Rural	No	No
R-1	Rural	Yes	Yes
R-2	Rural	No	Yes
R-3	Rural	Yes	Yes
R-4	Urban	Yes	Yes
P-1	Rural	Yes	Yes
I-1	Rural	Yes	Yes
B-1	Highway	Yes	Yes
B-2	Urban	Yes	Yes
B-3	Down-town	Yes	Yes

*Refers to Detail Drawing number in Appendix A of the Engineering Design Manual

(d) Street Surfacing. After completion of the grading and construction of sewer and water improvements in the street areas, the subdivider shall surface, or cause to be surfaced, the required roadway in such part and to such specifications as prescribed by the Village Engineer. The subdivider shall grade and seed in a Village-approved manner the parkway area of the

street between the street pavement and the lot line or sidewalk.

(e) Curb and Gutter; Drainage Facilities. After installation of all utility and storm water drainage improvements, the subdivider shall be required to construct concrete curbs and gutters, or as required in Table 54.103, a system of ditches and culverts. The subdivider shall install concrete curb and gutter along both sides of all streets and boulevards shown on the plat. The cost of the curb and gutter, required inspection, supervision and engineering fees shall be paid for by the subdivider. Wherever possible, provision shall be made at the time of construction for driveway access curb cuts.

Sec. 54.104 Sidewalks and Bikeways.

(a) Specifications. The subdivider shall install sidewalks along either or both sides of streets where required by the Board of Trustees in conformance with the Engineering Design Manual.

(b) Extra-Sized Sidewalks. Wider-than-standard sidewalks may be required by the Plan Commission in the vicinity of commercial areas; and the Board of Trustees may require the construction of sidewalks in locations other than required under the preceding provisions of this Section if such walks are necessary, in their opinion, for safe and adequate pedestrian circulation.

(c) Location. The subdivider shall be required to provide sidewalks and bikeways where required to Village specifications as follows: Sidewalks and bikeways shall normally be located as far from the traffic lane as is possible, but not closer than six inches to the right-of-way line. Where, as a result of such major obstructions as large and established trees, steep hills, drainageways, or major utility lines, the construction costs of the sidewalk or bikeway in its normal location would be prohibitive, sidewalks or bikeways may be located elsewhere within the street right-of-way, or within an easement, with the approval of the Village Engineer. Sidewalks and bikeways constructed at street intersections or within five feet of a legal crosswalk shall include provisions for curb ramping as required by Sec. 66.625, Wisconsin Statutes, and in accordance with Village standards. In all cases where the grades of sidewalks or bikeways have not been specifically fixed by ordinance, the sidewalks and bikeways shall be laid to the established grade of the street [Ref. Sec. 66.615(2), Wisconsin Statutes].

(d) Bikeways.

(1) Bikeways shall be designed to serve both pedestrian and bicycle traffic in high traffic areas.

(2) Bikeways may be installed in lieu of sidewalks.

(e) Location Determination. The Village Engineer shall determine where sidewalks and/or bikeways are required in accordance with this Section.

Sec. 54.105 Sanitary Sewerage System.

(a) The subdivider shall submit plan and profile drawings and specifications in conformance with the Engineering Design Manual to the Village Engineer for the installation of water main and water distribution facilities, sanitary sewerage facilities, holding tanks, septic fields including lateral connections for each lot extended to the lot line. The cost of such installation, including related engineering fees, shall be paid for by the subdivider. (Amended Ordinance 133-100207)

(b) Where sanitary sewer lift stations, force mains and grinder pumps are required to lift sewage to a higher elevation and to the gravity sewer system, the subdivider shall have the plan and profile drawings and specifications submitted for installation of sewage lift facilities to the Village Engineer for approval. Installation and inspection, supervision and engineering fees shall be paid for by the subdivider.

(c) Generally. The intent of the sewer and water extension requirements in this section are to provide rules for installing sewers and water mains to maintain uniformity, to provide for orderly and economic growth, and to limit the Village's liability regarding these utilities. It shall be unlawful for any party to connect to a Village sewer or water main without complying with the provisions of this chapter.

(d) Standard specifications. The required public improvements shall be installed in accordance with the engineering standards and specifications which have been established by the Village Engineer and

adopted by the Board of Trustees. The improvements shall be made in accordance with established engineering practices, approved prior to the start of construction by the Village Engineer. The "Engineering Design Manual" is the principal source that establishes the requirements. The document is on file in the office of the Village Administrator and open to inspection by the public during office hours of the Village Administrator.

(e) Sewer and water main extension requests. Within Village boundaries extension requests shall be presented to the Village in a petition requesting sewer and water service. Requests for either sewer or water alone will not be considered. Water mains will be extended for new customers on the following basis: (Amended Ordinance 133-100207)

(1) Where the cost of the extension is to immediately be collected through assessment by the Village against the abutting property, the procedure set forth under Wisconsin Statutes, §66.0703 will apply, and no additional customer contribution to the utility will be required.

(2) Where the Village is unwilling or unable to make a special assessment, the extension will be made on a customer-financed basis as follows:

a. The applicant(s) will advance as a contribution in aid of construction the total amount equivalent to that which would have been assessed for all property under (e)(1).

b. Part of the contribution required in (e)(2)(a) will be refundable. When additional customers are connected to the extended main within 10 years of the date of completion, contributions in aid of construction will be collected equal to the amount which would have been assessed under (e)(1) for the abutting property being served. This amount will be refunded to the original contributor(s). In no case will the contributions received from additional customers exceed the proportionate amount which would have been required under (e)(1), nor will it exceed the total assessable cost of the original extension.

(3) When a customer connects to a transmission main or connecting loop installed at utility expense within 10 years of the date of completion, there will be a contribution required of an amount equivalent to that which would have been assessed under (e)(1).

(f) Beyond Village boundaries. Extensions requested by property owners outside the Village will not be considered unless an unconditional petition request for annexation accompanies the extension request. Design and construction of any extension shall not begin until all annexation proceedings are complete and all properties to be served by sewer and water mains are incorporated in the boundaries of the Village. [See section 54.65(f) page 15]

(g) Village ownership. All Village-owned sewers and water mains shall be a minimum of eight-inch diameter for residential projects and 12 inches for commercial projects. These sewers and water mains shall be owned, designed and constructed by the Village except as designated in this chapter. No more than one building shall be served by a single sewer or water lateral. Under special conditions, such as a private system conveying wastewater from a group of small cottages or a system serving apartments, the Village may consider granting a permit for a single lateral. These special conditions will be reviewed on a case-by-case basis. This definition, except under special conditions, prohibits the installation of "private interceptor main sewers" as defined by the Wis. Admin. Code Comm. Chapter 82 (after this called the "plumbing code"). This definition, except under special conditions, also prohibits the installation of a six-inch diameter water main to serve more than one building. The installation

of an eight-inch diameter sewer or water main lateral if required to serve a single building, shall be exempt from the Village ownership requirement unless the Village decides that a future branch extension off this lateral, may be required to serve future development in which case all or part of the lateral shall be considered a Village-owned sewer or water main extension.

(h) Village design and bidding. Based on water use requirements for property owners requesting extensions and potential future development, the Village Engineer shall design sewer and water main extensions according to State Department of Natural Resources (DNR) code requirements and policies and shall obtain plans and specifications approval from the DNR. The Village Engineer shall be responsible for all aspects of the design, including sizing and layout to accommodate future development and adherence to the Village sewer and water main extension design policy.

(1) Although efforts will be made to accommodate property owner wishes of routing sewer and water mains, the Village retains the right to designate the layout to accommodate future extensions and to accommodate connections to the existing system of sewer and water mains. Whenever possible, the Village water main shall be looped and the cost of looping shall be borne by the property owners upon which the looping occurs. Upon completion of plans and specifications, the Village shall bid the project according to law.

(2) Upon DNR approval of the sewer and water main extension, receipt of all required signed and recorded easements, and completion of all special assessment proceedings, the Village shall award the contract to the lowest responsible and responsive bidder. The Village may award contracts subject to DNR approval, the acquisition of all easements and the completion of special assessment proceedings and these conditional awards may be made at the discretion of the Village.

(i) Easements and public rights-of-way.

(1) All Village sewers and water main extensions shall be constructed in public rights-of-way, Village-owned property or on easements acquired by the Village from private property owners. Commencement of construction will not be permitted until all easements are acquired.

(2) The Village will accept, or enter into easements with private property owners only under the exclusive terms of the Village and consideration for each single easement shall be for $1.00. Easements shall be granted along all routes of sewer and water mains according to the Village-approved design prepared by the Village Engineer.

(3) Easements will prohibit construction in the easement area and provide access for maintenance, repair or replacement of sewer and water mains routed through the easement. Easements will not include Village compensation for plantings, structures or any other items located in the easement area. Construction in easement areas will include surface restoration of topsoil and seeding and bituminous (but not concrete) replacement to like quality and thickness.

(4) Easements for the installation of sewer and/or water mains shall be a minimum of 30 feet in width. Easements shall be dedicated to the Village for only sewer and/or water mains unless otherwise approved by the Village.

(j) Village inspection of construction. The Village Engineer shall provide inspection services during construction according to DNR approval conditions.

(k) Village cost recovery.

(1) The Village may either require upfront payment for all costs associated with the sewer and water extensions or may recover the cost through special assessment powers of the Village. Costs include but are not limited to construction, de-

sign and inspection, engineering, legal fees and any other related costs. Where a request from a private real estate developer for a water main or sewer extension is made, the Village shall require that all costs associated with the extension be paid upfront by the developer. Upon re-quest for a water main or sewer extension by a private real estate developer, the Village Engineer shall prepare a cost estimate for completing a preliminary plan and an estimate of the capital costs for the proposed project. The costs of the preliminary engineering plan and preparing the capital cost estimate shall be paid for by the developer before the Village Engineer beginning this work. The Village Engineer's capital cost estimate for the proposed project shall also be paid to the Village before the Village Engineer beginning this work. The Village Engineer's capital cost estimate for the proposed project shall also be paid to the Village before the Village Engineer beginning detailed plans and specifications. At the completion of the project, the developer shall pay the Village any excess costs associated with the project above the estimated capital cost within 30 days of the date of the bill or the Village shall refund any surplus amount of the developer. The Village will require such upfront payments when a Village sewer and/or water main are in-stalled within the "interior" of the real estate owned by the developer. The term "interior" shall mean sewer and water extensions laid along public rights-of-way or easements in which the same developer owns the real estate on both sides of the right-of-way or easement. The Village will also require upfront payment for total cost in areas where a sewer or water line is bordered on only one side by the developer's land while the opposite side is bordered by lands not immediately assessable for any reason. (Amended Ordinance 133-100207)

(2) Except circumstances described in this section referring to private real estate developer requests, the Village shall generally recover costs through special assessments levied to property owners on a per foot basis for sewer and water mains, and additional charges for service laterals installed in the public right-of-way or easement area. Details of assessment allocation will be included in a special assessment engineer's report prepared by the Village Engineer. All special assessment proceedings shall be according to statute.

(3) Where a sewer or water main is designed for a larger capacity than the property owners being served require for ultimate capacity (for serving future sewer or water main extensions) and the sewer or water main is larger than eight-inch diameter, then the cost increment of pipe size difference between existing property ultimate capacity requirements and future extension requirements shall be paid for by the Village, and the property owners shall pay costs based on the smaller size required for those property owner requirements.

(4) The description of cost recovery applies only to the recovery of sewer and water main extensions and not to connection charges or quarterly billing for lift stations, wastewater interceptors, wastewater treatment, wells, water storage facilities, water booster pump stations, administration, operation, maintenance, replacement costs and other system costs not associated directly with the installation of sewer and water main extensions.

(5) Subdivision developers shall be responsible, where the main extension has been approved by the utility, for the water service lateral installation costs from the main through the curb stop and box. When the cost of a utility main extension is to be collected through

assessment by the municipality, the actual average water lateral installation costs from the main through the curb stop and box shall be included in the assessment of the appropriate properties. (Amended Ordinance 133-100207)

(l) Private sewer and water lateral and connection requirements.

(1) All sewer and water pipes smaller than eight-inch for residential or twelve-inch for commercial diameter shall be privately owned except where serving Village or other public properties.

(2) All property owners requesting sewer and water service must complete an application for a connection permit from the Village. No connection may take place until a connection permit is granted by the Village. All connections and service lateral installations shall be according to current Village standard specifications and the plumbing code.

(3) After sewer connections have been introduced into any building or upon any premises, no alterations, extensions or attachments shall be made unless the party ordering such tapping or other work exhibits a permit for the work from the administrator.

(4) All sewer and water lateral layouts and connections shall be subject to Village review and control. Construction shall be according to the Village standard specifications. Restoration shall be such that the surface is at least as good as its original condition. Copies of plans for systems requiring specific COMM plan approval shall be made available to the Village before any commencement of construction.

(5) No person, except those having special written permission from the board or persons in their service and approved by them, will be permitted, under any circumstances to tap the mains or collection pipes. The kind and size of the connection with the pipe shall be that specified in the permits or order from the board to ensure that new sewers and connections to the sewer system are properly designed and constructed.

(6) Pipes should always be tapped on top, and not within six inches (15 cm) of the joint or within 24 inches (60 cm) of another lateral connection. All service connections to mains must comply with the state plumbing code. Service connections to an existing sewer main shall be made by means of a saddled wye or specially adapted tee. Connections to existing tees or wyes shall be made with an approved bonded rubber.

(7) Trenches for sewer and water laterals shall not be covered without Village inspection of the installation. Any lateral trenches covered without Village inspection shall be subject to reopening at the expense of the person installing the laterals and the costs may become a lien on the property if not paid on demand. Where existing buildings previously served by private waste disposal systems (i.e., conventional septic systems, holding tanks, mound systems, etc.) are to be connected to a Village sewer or water main, the Village reserves the right to inspect any existing service laterals proposed to be used as part of the connecting service lateral and to require that any service lateral not meeting current plumbing code standards be replaced up to the point where it exits the structure served.

(8) The initial water service lateral(s), not installed as part of a subdivision development or an assessable utility extension, will be installed from the main through the curb stop and box by the utility, for which the actual cost will be charged. (Amended Ordinance 133-100207)

(m) Sewer connection fees. All new users to the sewer system are required to buy into the system-wide improvements through an initial connection charge. The initial

connection charge will be levied against each user connected to the sanitary sewer. The single-family residence connection charge will be on file in the Village payable before connection to the sewer. Initial connection charge for multiple-family, commercial or industrial buildings will be based on a multiple of the single-family connection charge or residential equivalent user (REU). The initial connection charge for restaurants or small commercial connections will be based on a multiple of the volume of water usage and strength of wastewater in comparison to a typical single-family residence residential equivalent user having the following standards:

(n) Initial connection charges for motels shall be based on three motel units being equal to one family residence residential equivalent user, except that condominium motels shall be considered based on the extent of plumbing fixtures provided. The Village may amend or alter any connection charge after its establishment under the terms of this chapter or by resolution passed by the Board of Trustees.

Sec. 54.106 Water Supply Facilities.

(a) Submissions Required. The subdivider shall submit plan and profile drawings and specifications in conformance with the Engineering Design Manual to the Village Engineer for the installation of water main facilities including the water main, pipe fittings, valves, hydrants, lateral house connections for each lot extended to the lot line. The cost of such installation, inspection, supervision and engineering fees shall be paid for by the subdivider.

(b) Fire protection and hydrants. The intent of this section is to insure adequate water supply for fire-fighting purposes to structures and buildings. The Village Engineer and Fire Chief shall certify in writing that sufficient water flow and pressure exists to serve the project for fire protection. For the purpose of placing hydrants, normal access routes are defined as pavement, sidewalks, streets, driveways and paths leading to the building that are clear and maintained year round. The normal access route does not include grass, parking stalls, ditches, hills, shrub beds, fences, walls or any other area not typically used for ingress or regress to a building. (Amended Ordinance 133-100207)

(c) Buildings Where Required. Any building, except single- and two-family dwellings, hereafter erected, shall provide, at the owner's expense, approved water hydrants. Hydrants shall be located so that no part of a building is more than 300 feet from an approved hydrant by normal access routes. This requirement may be modified upon written request by the owner to both the Fire Chief and Utility Manager who must both concur in writing why the modification should be permitted. The request may be approved only if the fire protection provided to the building is not reduced by the modification. Required hydrants shall be free standing and shall be installed not more than 50 feet or less than 25 feet from the building exterior wall. No hydrant shall be placed closer than 50 feet to any other hydrant. The Fire Department Fire Inspector and Utility Manager will approve the actual location of all fire hydrants. Two copies of the building plans including site plan, shall be provided to the Zoning Administrator for Fire Department use, in addition to any copies of building plans required by the Zoning Administrator. (Amended Ordinance 133-100207)

(d) Accessibility. All developments in districts other than R-1, R-3, R-4 and CS-1, the buildings, grading and landscaping shall be constructed, installed and maintained in such a fashion that Fire Department can have access around the entire building(s) during the entire year. The Fire Chief shall provide written confirmation of such access to the Plan Commission prior to subdivision approval.

Sec. 54.107 Other Utilities.

(a) In so far as possible, all utilities, including but not limited to telephone, cable TV, electric, and water shall be installed underground with an affidavit by the subdivider that the maintenance of said public improvements will be guaranteed by the subdivider due to use of the improvements by purchasers and construction traffic.

(1) Where telephone and electric service lines are placed underground

entirely throughout a subdivision area, conduits or cables shall be placed within easements or dedicated public ways in a manner which will not conflict with other municipal underground services as follows:

a. All utility companies and contractors must get approval from the Village Engineer prior to installing any underground lines, cables or piping in a public right-of-way or easement dedicated to the Village.

b. All buried power lines, telephone lines and cable television lines must be off-set a minimum of 36″ from the water and sewer lines and cannot be located between the water and sewer lines and the edge of pavement.

c. All lines, cables or piping must be buried a minimum of 18″ below final grade including the bottom of any and all drainageways, ditches and water courses. Variances may be granted in writing by the Village Engineer due to rock depth if State installation codes allow.

d. All buried power lines, telephone lines and cable television lines must not be buried running parallel to an existing or proposed roadway. All buried power lines, telephone lines and cable television lines must cross a roadway in a perpendicular manner.

(2) If there is not enough room in the public right-of-way for the installation of buried power lines, telephone lines and cable television lines consistent with these requirements then the utility company, contractor or developer must acquire additional right-of-way.

(3) Prior to any maintenance, repair or replacement being performed by the developer during the bond period, the developer shall notify the Village Engineer at least one work day prior to doing the work and obtain approval of the Village Engineer as to the nature and manner of work to be done.

(4) Where telephone and electric service lines are placed underground entirely throughout a subdivision area, conduits or cables shall be placed within easements or dedicated public ways in a manner which will not conflict with other municipal underground services.

(5) All utility lines for telephone and electric service shall be buried and placed in rear line easements where practicable and side lot line easements, where necessary, when carried on overhead poles only by approval of the Plan Commission.

(b) The subdivider shall cause electric power, cable television and telephone facilities to be installed in such a manner as to make adequate service available to each lot in the subdivision or certified survey map. All new electrical distribution, cable television and telephone lines from which lots are individually served shall be underground unless the Board of Trustees, upon the recommendation of pertinent Village utilities or Plan Commission, specifically allows overhead poles for the following reasons:

(1) Topography, soil, water table, solid rock, boulders, or other physical conditions would make underground installation unreasonable or impractical; or

(c) Plans indicating the proposed location of all electrical power, cable television and telephone distribution and transmission lines required to service the plat shall be approved by the Village Engineer following approval of the preliminary plat.

Sec. 54.108 Street Lamps.

Where required by Table 54.103, [See page 27] the subdivider shall install ornamental street lighting, including light standards, underground burial of connecting electrical lines and related appurtenances, along all streets proposed to be dedicated of a design in accord with Village approved standards and specifications. Such lamps

shall be placed at each street intersection and at such interior block spacing as may be required by the Village Engineer. Such required improvements shall be dedicated to the Village upon such terms and conditions as the Board of Trustees may determine.

Sec. 54.109 Street Signs.

(a) The subdivider shall arrange with the Village and pay the costs of providing the Village standard street signing necessary to serve the development. Such signing shall include street name signs and such temporary barricades and "road closed" signs as may be required by the Village Engineer until the street improvements have been accepted by Board of Trustees resolution.

(b) The Village Engineer shall have the authority to impose any restrictions to traffic on street improvements not yet accepted by the Village as he/she may deem necessary to protect the improvements from damage and to protect the safety of the public. Such restrictions shall include, but not be limited by enumeration to, weight restrictions, street closings, access restrictions, or the posting of temporary traffic control measures.

Sec. 54.110 Street Trees.

Where required by Table 54.103, [See page 27] the subdivider shall plant street trees along all streets within the land division when required by the Board of Trustees. The size, species and location shall be in accordance with the approved landscaping plan.

Sec. 54.111 Erosion Control.

The subdivider shall comply with State Statutes.

Sec. 54.112 Easements.

(a) Utility Easements. The Board of Trustees, on the recommendation of appropriate departments, utilities and agencies serving the Village, shall require utility easements for poles, wire, conduits, storm and sanitary sewers, water and other utility lines. It is the intent of this chapter to protect all established easements so as to assure proper grade, assure maintenance of the established grade, prohibit construction of permanent fences or retaining walls over underground installation and prevent the planting of trees in the easement area. Such easements shall be established at the rear of each lot and along such other lot lines as to provide continuity or alignment from block to block. At deflection points in these easements, if overhead utility lines are contemplated, additional easements shall be established for pole-line anchors.

(b) Drainage Easements. Drainage easements shall comply with the requirements of the Engineering Design Manual.

Easement Locations.

(1) Utility easements shall be at least 12 feet wide, or wider where recommended by the Village Engineer. Evidence shall be furnished to the Plan Commission that easements and any easement provisions to be incorporated in the plat or in deeds have been reviewed by the individual utility companies or the organization responsible for furnishing the services involved.

(2) All easements dedicated on final plat or certified survey maps for poles, cables or conduits for electricity, telephone or other private utility lines shall be noted thereon as "Utility Easement." All easements for storm and sanitary sewers, water and force mains, pedestrian walks and other public purposes shall be noted thereon as "Public Easement for" followed by reference to the use or uses for which they are intended.

(c) Deed Restrictions for Easements. Deed restrictions shall accompany each final plat or certified survey map, and shall be filed in the Register of Deeds office. In addition to whatever else may be contained therein, such restrictions shall describe the location and width of utility and public easements which are being established; a description by reference to the final plat or certified survey map shall suffice. Such restrictions shall further recite that the utility companies and the public agencies using such easements are granted the right to place, and shall state that the elevation of such easements as graded by the subdivider may not be altered thereafter by him, or any subsequent landowner by more than six inches.

Sec. 54.113 Over-Sizing and Off-Site Facilities.

(a) Design Capacity. All improvements within or entering or leaving the proposed development shall be installed to satisfy the service requirements for the entire service or drainage area in which the development is located and the improvements shall be of sufficient capacity to handle the expected development of the overall service area involved.

(b) Mains of Large Capacity. Where sanitary sewer mains and water mains of larger capacity than normally necessary are required by the overall system plan to serve the subdivision as delineated in the preliminary plat, the subdivider shall be required to pay for the proportionate benefit of the installation to his/hers subdivision as established by the Board of Trustees in the Village's oversizing policy.

(c) Lift Stations. Where sanitary or storm sewer lift stations and force mains are required to lift sewage or clear water to the gravity system, the subdivider shall have plans, profiles, specifications and estimated operation and maintenance costs prepared for the installation of such facilities to the Village Engineer's requirements. Equipment similar to existing Village equipment shall be utilized whenever possible. The installation, inspection, supervision and engineering fees for lift stations and/or force mains shall be paid for by the subdivider unless otherwise determined and agreed upon by the Board of Trustees. Gravity sanitary sewer service shall be employed whenever determined by the Village Engineer to be feasibly accessible.

Sec. 54.114 Acceptance of Improvements and Dedications.

(a) Acceptance of Improvements. The dedication of any improvements, utilities, streets, parks, easements, rights-of-way or other lands or rights to the Village or the public shall not be considered accepted by the Village for public ownership until such time as the required public improvements within the intended dedication are complete and accepted by the Board of Trustees by adoption of a resolution accepting such dedication. Improvements shall be dedicated to the Village free and clear of any encumbrances. The subdivider shall be responsible for and liable for the maintenance, safety and operation of all required public improvements until such time as the improvements are accepted by the Board of Trustees by resolution. In the event the Village must take measures to maintain, operate or make safe a public improvement existing or required as a result of the land division but which has not yet been accepted by the Village, the costs of such measures shall hereby be determined to be Village-incurred costs to be reimbursed to the Village by the subdivider in accordance with the provisions of this chapter.

Inspection and Certification of Improvements.

(1) After any of the following increments of the required improvements have been installed and completed, the subdivider shall notify the Village Engineer, in writing, that the work is complete and ready for final inspection, shall file reproducible record drawings of the completed improvements and shall file lien waivers or affidavits, in a form acceptable to the Village Engineer and approved by the Village Attorney, evidencing that there are no claims, actions or demands for damages, based upon contract or tort arising out of or in any way related to the project and that no moneys are owned to any surveyor, mechanic, contractor, subcontractor, supplier or laborer after all required improvements have been installed. Acceptance of the improvements may be requested in the following increments:

a. Sewer mains and services (either storm or sanitary).

b. Water mains and services.

c. Streets comprised of all grading, gravel, curb and gutter, culverts and paving.

d. Other miscellaneous appurtenances to the above increments such as sidewalks, bikeways, street lighting, street signing, etc.

(2) The Village Clerk shall certify that there are no unpaid taxes or unpaid special assessments on any of the lands included in the area of acceptance and shall prepare a final billing for engineer, inspection and legal fees and submit it to the subdivider for payment. The Village Engineer shall conduct any necessary final inspections of the improvements and forward a report to the Village Clerk recommending either approval or disapproval. When the engineering, inspection, taxes, special assessments and legal fees have been paid and when the necessary lien waivers and affidavits have been filed, the report of the Village Engineer and the plat shall be forwarded to the Board of Trustees for approval and acceptance of the improvements and dedications.

Sec. 54.115 Site Grading.

The subdivider shall be required to grade the full land division in accordance with the requirements of Section 54.125. [See page 45]

1 **Reserved.**

DESIGN STANDARDS

Sec. 54.120 General Street Design Standards.

(a) Compliance with Statutes. In laying out a certified survey map or subdivision, the owner shall conform to the provisions of Chapter 236, Wisconsin Statutes, and all applicable Village regulations, including the Engineering Design Manual as published by the Village. In all cases where the requirements of this chapter are different from the requirements of Chapter 236, the more restrictive provision shall apply.

(b) Dedication. The subdivider shall dedicate land and improve streets as provided in this chapter and Section 54.103 [See page 27]. Streets shall be located with due regard for topographical conditions, natural features, existing and proposed streets, utilities and land uses and public convenience and safety. Streets shall conform to official maps adopted by the Board of Trustees. The subdivision or certified survey map shall be so designed as to provide each lot with satisfactory access to a public street or road.

(c) Compliance with Comprehensive Plan and Ordinances.

(1) The arrangement, character, features, and layout of land divisions in the Village shall be designed to comply with the standards of this chapter, the Comprehensive Plan, the Official Map, and/or any comprehensive utility plans and the Engineering Design Manual or other planning documents which may pertain to the standards of design for land divisions and which have been adopted by the Board of Trustees. In the absence of a street being shown on the Official Map, streets shall be provided in locations determined necessary by the Village Engineer and to the right-of-way widths required in this chapter for the classification of street required.

(2) The arrangement, character, extent, width, grade, and location of all streets shall conform to Village master plans, the Official Map, the Engineering Design Manual, this chapter, and other Village planning documents, and shall be considered in their relation to: existing and planned streets, reasonable circulation of traffic, topographical conditions, run-off of storm water, public convenience and safety, and in their appropriate relation to the proposed uses of the land to be served by such streets.

(3) The arrangement of streets in new subdivisions shall make provision for the appropriate continuation at the same or greater width of the existing streets in adjoining areas.

(4) Collector streets shall be properly related to the arterial highway and to the mass transportation system, to special traffic generators such as churches and shopping centers, and to the major streets into which they connect.

(5) Minor streets shall be designed to reasonably conform to the topography to discourage use by through traffic, to permit efficient storm and sanitary sewerage systems, and to require the minimum street area necessary to provide safe and convenient access to abutting property.

(6) Proposed streets shall be extended to the boundary lines of the tract to be subdivided, unless prevented by topography or other physical conditions or unless in the opinion of the Plan Commission such extension is not necessary or desirable for the coordination of the layout of the subdivision or for the advantageous development of the adjacent tracts.

(d) Areas Not Covered by Official Map or Plan. In areas not covered by an Official Map, the layout of streets shall conform to the plan for the most advantageous development of adjoining areas of the neighborhood. Streets shall be designed and located in relation to existing and officially planned streets, topography and natural terrain, streams and lakes and existing tree growth, public convenience and safety and in their appropriate rela-

tion to the proposed use of the land to be served by such streets.

(e) Arterial Streets and Highways. Provisions shall be made for serving lots for residential use abutting major streets and highways by either the use of marginal access streets; backing lots to the primary street with a screen planting contained in a non-access reservation along the rear property line; or deeper lots fronting on the primary street with rear service alleys. These methods are recommended for the purpose of providing adequate protection of residential properties and to afford separation of through and local traffic.

(f) Width. The right-of-way widths shall be of the width specified on the Official Map or Master Plan, or if no width is specified there, they shall be not less than the width specified below:

(1) Arterial Street. 120 feet.

(2) Collector Street. 70 feet.

(3) Minor Street. 60 feet.

(4) Half Street. One-half (1/2) total right-of-way of proposed street.

(5) Cul-de-sac Street. 60 feet.

(6) Marginal Access Street. 30 feet.

(7) One-way Streets in Residential Planned Development District. 50 feet

(g) Alignment. Horizontal and vertical alignment of all streets shall conform to the Engineering Design Manual.

Cul-de-sac or Dead End Streets.

(1) Temporary Cul-de-sacs. A temporary cul-de-sac with a minimum pavement diameter of 65 feet shall be installed for each dead end street in excess of 200 feet measured from the street of origin to the end of its right-of-way. If each side of a dead end street not requiring a cul-de-sac abuts one lot only, the driveway for such lot shall be located to exit onto the street of origin. If either side of said dead end street abuts two lots, the driveway for the lot nearest the dead end shall be located within the first 30 feet nearest the street of origin. Temporary cul-de-sac streets shall be not more than 300 feet in length measured along their center lines from the streets of origin to the ends of their right-of-way.

(2) Permanent Cul-de-sacs. Cul-de-sac streets shall be not more than 300 feet in length measured along their center lines from the streets of origin to the ends of their right-of-way. The Plan Commission may upon the recommendation of the Fire Chief allow cul-de-sac streets up to 500 feet in length. Each cul-de-sac shall have a terminus constructed in accord with the Engineering Design Manual.

Dead End Streets.

(3) A zoning permit shall be issued for one residential principal building proposed to be built beyond the terminus point of an existing paved street, and beyond the terminus point of existing sanitary sewer, watermain or storm sewer, only if the sanitary sewer, watermain and storm sewer laterals are installed in a perpendicular manner from the proposed principal building to the street right-of-way or proposed street rights-of-way as depicted in Figure 1 (see appendix at the end of this chapter).

(4) A zoning permit shall be issued for one residential principal building proposed to be built beyond the terminus point of an existing street or beyond the terminus point of an existing sanitary sewer, watermain or storm sewer only if a temporary cul-de-sac is installed with the terminus point of the proposed cul-de-sac installed at least 75 feet from the terminus of the existing pavement or to a point perpendicular to the midpoint of the proposed principal building, whichever is greater, as depicted in Figure 2 (see appendix at the end of this chapter).

(5) A zoning permit shall not be issued for a second residential principal building which is proposed to be built across the street from a principal building as described in sub. (a) and (b) unless all public improvements including paved streets, storm sewer or other storm drainage facility, sanitary sewer and watermain are installed across the

entire frontage of the lot or parcel on which the building is located, or across the minimum lot frontage for the zoning district in which the property is located, whichever is less, provided that a temporary cul-de-sac is installed in accordance with sub. (b), as depicted in Figure 3 (see appendix at the end of this chapter).

(6) If in the judgment of the Village Engineer a physical feature that exists beyond the terminus of the new pavement, described in sub. (c), prevents this pavement from being extended further, the temporary cul-de-sac described in sub. (c) May, at the discretion of the Plan Commission and Board of Trustees, be required to be a permanent cul-de-sac, as depicted in Figure 4 (see appendix at the end of this chapter).

(h) Half Streets. Where a half street exists adjacent to the subdivision, the other half of the street shall be dedicated by the subdivider. Platting of new half streets along property lines shall not be permitted except by approval of the Plan Commission.

(i) Intersections.

(1) Streets shall intersect as nearly as possible at right angles and not more than two streets shall intersect at one point unless approved by the Plan Commission.

(2) Street jogs with center line offsets of less than 125 feet shall be avoided. Where streets intersect major streets, their alignment shall be continuous.

(j) Street Names. New street names shall not duplicate the names of existing streets, but streets that are continuations of others already in existence and named shall bear the names of the existing streets. Continuous streets that change directions shall be given a distinct street name for each street segment of a different direction. Street names shall be subject to approval by the Plan Commission.

(k) Limited Access Highway Treatment. Whenever the proposed subdivision contains or is adjacent to a limited access highway, arterial street, the design shall provide the following treatment:

(1) Subdivision Lots. When lots within the proposed subdivision back upon the right-of-way of an existing or proposed limited access highway, a planting strip at least 30 feet in depth shall be provided adjacent to the highway in addition to the normal lot depth. This strip shall be part of the platted lots but shall have the following restriction lettered on the face of the plat: "This strip reserved for the planting of trees and shrubs, the building of structures or use for vehicular access hereon prohibited."

(2) Streets Parallel to a Limited Access Highway. Streets parallel to a limited access highway when intersecting a major street and highway or collector street which crosses the highway, shall be located at a minimum distance of 250 feet from the highway right-of-way. Such distance, where desirable and practicable, shall be determined with due consideration of the minimum distance required for the future separation of grades by means of appropriate approach gradients.

(3) Minor Streets. Minor streets immediately adjacent and parallel to railroad rights-of-way shall be avoided, and location of minor streets immediately adjacent to arterial streets and highways rights-of-way shall be avoided in residential areas.

Sec. 54.121 Block Design Standards.

(a) Length; Arrangement.

(1) The maximum lengths of blocks containing lots of 75 feet and over in width shall be 1,800 feet, and the maximum length of blocks containing lots less than 75 feet shall be 1,200 lineal feet. No blocks shall be less than 900 lineal feet in length unless approved by the Plan Commission.

(2) No specific rule concerning the shape of blocks is made, but blocks must fit readily into the overall plan of the subdivision and their design must evidence consideration of topographical condi-

tions and surface drainage, lot planning, traffic flow, public open-space areas and water and sewerage requirements.

(3) Blocks intended for commercial and institutional use must be designated as such, and the plan must show adequate off-street areas to provide for parking, loading docks and such other facilities as may be required to accommodate motor vehicles.

(b) Pedestrian Pathways. Pedestrian pathway easements not less than 12 feet wide or rights-of-way not less than 20 feet wide through the center of a block more than 900 feet long, may be required by the Plan Commission, where deemed essential to provide circulation or access to playgrounds, shopping centers, transportation and other community facilities.

Sec. 54.122 Lot Design Standards.

(a) Size. The size, shape and orientation of lots shall be appropriate for the location of topography of the land division, and for the type of development contemplated, provided that no lot shall be smaller in area than the minimum lot size for the appropriate zone as established by the Village Zoning Code.

Lot Dimensions.

(1) Width and area of lots shall conform to lot width and area requirements set forth in the Zoning Code. The minimum lot width as required by the setback regulations for a particular zoning district shall be along the minimum building setback line (front) as located in those zoning regulations.

(2) Depth of lots shall be in accordance with Plan Commission requirements but not less than 115 feet in depth for interior lots and 90 feet in depth for corner lots.

(3) Depth and width of properties reserved or laid out for commercial purposes shall be adequate to provide for the off-street service, parking and loading facilities required by the type of use and development contemplated.

(4) Residential lots abutting on major streets and highways shall be platted with sufficient depth to permit adequate separation between the buildings and such traffic ways in accord with the setback provisions of the particular zoning district.

(5) Butt lots shall be platted at least five feet wider than the average interior lots in developments containing lots less than 12,000 square feet in area.

(6) Lots abutting upon a water course, drainage way, channel or stream, shall be an additional depth or width as required to provide an acceptable building site.

(b) Corner Lots. Corner lots should be designed to permit full setback on both streets as required by the applicable zoning district requirements.

(c) Access to Public Streets. Every lot shall front or abut on a public street. Lots with an access only to private drives or streets shall be permitted only with Plan Commission approval.

(d) Lot Lines. Side lot lines shall be substantially at right angles or radial to street lines.

(e) Large Lots. Where lots are created of a size larger than normal for the area, the Plan Commission may require that the plat be so designed as to allow for the possible future re-subdivision of such lots into normal sizes compatible with the area.

(f) Municipal Boundaries. Lots shall follow municipal boundary lines whenever practicable, rather than cross them.

(g) Through Lots. Through lots shall be avoided except where necessary to provide separations of residential development from traffic arteries or to overcome specific disadvantages of topography and orientation.

(h) Natural Features. In the dividing of any land, regard shall be shown for all natural features, such as tree growth, water courses, historic spots or similar conditions which, if preserved, will add attractiveness and stability to the proposed development.

(i) Land Remnants. All remnants of lots below minimum size left over after dividing of a larger tract must be added to adjacent lots, or a plan shown as to future use

rather than allowed to remain as unusable parcels.

(j) Trunk Highway Proximity. All lots adjacent to state trunk and federal highways shall be platted with additional depth necessary to provide for a building setback line not less than 50 feet from the nearer right-of-way line or 110 feet from the centerline, whichever is more restrictive (Ref. Wis. Adm. Code HY 33). The subdivider may appeal this requirement to the Village Engineer. Upon written request of the Village Engineer; the Wisconsin Department of Transportation is hereby authorized to then determine building setback requirements equal to or less than those required above in all land divisions (including certified surveys) adjacent to state and federal highways in accordance with the authority granted in the Administrative Code. The required building setback line and additional lot depth shall be platted so as to accommodate such required building setbacks.

(k) Easement Allowance. Lots containing side yard pedestrian or drainage easements shall be platted to include additional width in allowance for the easement.

(l) Drainage Way and Watercourses. Lots abutting upon a water course, drainage way, channel or stream shall have such additional depth or width as required by the Village Engineer to obtain building sites that are not subject to flooding from a post-development 100 year storm.

Sec. 54.123 Drainage and Stormwater Management System.

(a) Purpose. The following provisions in this Section are established to preserve and provide properly located public sites and facilities for drainage and stormwater management as the community develops, and to insure that the costs of providing and developing such public sites are equitably apportioned on the basis of serving the need for the management of increased stormwater quantities resulting from land development.

(b) Drainage System Required. A drainage system complying with the Engineering Design Manual shall be provided by the subdivider. The Plan Commission shall not recommend for approval any land division that does not provide adequate means for storm water or flood water runoff. A final plat shall not be submitted and approved until the subdivider installs drainage improvements specified in this Section.

(1) A drainage system shall be designed and constructed by the subdivider to provide for the proper drainage of the surface water of the land division and the drainage area of which it is a part. Design shall be in conformance with the Engineering Design Manual. A Final Plat shall not be submitted and approved until the subdivider installs drainage improvements specified in this Section.

(2) Lots shall be laid out to provide positive drainage away from all buildings, and individual lot drainage shall be coordinated with the general storm drainage pattern for the area. Drainage shall be designed to avoid concentration of storm drainage water from each lot to adjacent lots.

(3) The Plan Commission shall not recommend for approval any subdivision plat which does not provide adequate means for stormwater or floodwater runoff. Any stormwater drainage system will be separate and independent of any sanitary sewer system. Storm sewers, where necessary, shall be designed in accordance with all governmental regulations, and a copy of design computations for hydraulic capacities shall accompany plans submitted by the design engineer.

Drainage System Plans.

(4) The subdivider shall submit to the Village at the time of filing a Preliminary Plat a drainage plan and engineering report on the ability of existing watercourse channels, storm sewers, culverts and other improvements pertaining to drainage or flood control within the subdivision to handle the additional runoff which would be generated by the development of the land within the subdivision. Additional information shall be submitted to adequately indicate that

provision has been made for disposal of surface water without any damage to the developed or undeveloped land downstream or below the proposed subdivision.

(c) Drainage System Requirements. The subdivider shall install all the storm drainage facilities indicated on the plans required in Subsection (a) of this Section necessary to serve, and resulting from, the phase of the land division under development:

(1) Street Drainage. Street drainage systems shall comply with the requirements in the Engineering Design Manual.

(2) Off-Street Drainage. Off-street drainage systems shall comply with the requirements in the Engineering Design Manual.

(d) Protection of Drainage Systems. The subdivider shall adequately protect all ditches to the satisfaction of the Village Engineer.

(e) Drainage Easements. Storm water and drainage easements or right-of-ways shall be provided in accordance with the Engineering Design Manual.

(f) Dedication of Drainageways. Whenever a parcel is to be subdivided or consolidated and embraces any part of a drainageway identified on a Village Comprehensive Storm Water Management Plan, master plan and/or official map or any portion thereof, such part of said existing or proposed public drainageway shall be platted and dedicated by the subdivider as an easement or right-of-way in the location and at the size indicated along with all other streets and public ways in the land division. Whenever any parcel is to be subdivided or consolidated and is part of a drainage district established under the authority of chapter 88, Wisconsin Statutes, and the subdivider shall petition the Circuit Court to transfer the jurisdiction of that portion of the drainage district being subdivided or consolidated to the Village in accordance with chapter 88.83, Wisconsin Statutes

(g) Dedication/Preservation of Storm Water Management Facilities. The subdivider shall dedicate sufficient land area for the storage of storm water to meet the needs to be created by the proposed land development and in accordance with the standards for on-site detention and as determined by the Village Engineer. Whenever a proposed storm water management facility (e.g., detention or retention basin) shown on the Comprehensive Storm Water Management Plan, master plan and/or official map is located, in whole or in part, within the proposed land division, ground areas for providing the required storage capacity in such proposed public facility shall be dedicated to the public to the requirements of the master plan and/or official map. Storage areas necessary to serve areas outside the land division shall be held in reserve for a period of five years from the date of final plat approval for future dedication to the Village or other appropriate agency.

(h) Storm Drainage Facilities. The subdivider, at his/hers cost, shall install all drainage facilities identified in the Erosion Control Plan or determined by the Village Engineer as being necessary for the management of all lands and roadways within the development. In addition, drainage capacity through the development from other areas shall be provided in accordance with a Comprehensive Surface Water Management Study, if applicable. All required storm drainage facilities shall be constructed and operational prior to acceptance of any dedications and/or public improvements served by the storm drainage facilities.

(i) Major Drainage System. The sub-divider shall install all major drainage system components necessary to reduce inconvenience and damages from infrequent storms. Major system components shall include large channels and drainageways, streets, easements and other paths and shall be capable of accommodating post-development runoff in excess of that accommodated by minor system components resulting from the design rainfall event as specified in the Engineering Design Manual for storms with return frequencies greater than ten years up to and including the 100 year return event.

(j) Stormwater Drainage Control. Drainage and storm water management systems for new development and redevelopment shall comply with the requirements in the Engineering Design Manual.

Sec. 54.124 Reserved.

Sec. 54.125 Grading.

The subdivider shall grade each land division in order to establish street, block and lot grades in proper relation to each other and to topography as follows:

(a) Master Site-Grading Plan.

(1) A master site-grading plan shall be prepared by the subdivider in conformance with the standards in the Engineering Design Manual by a professional engineer for all new land divisions and this plan shall be approved by the Village Engineer prior to the approval and recording of the final plat. This plan shall be prepared in accordance with the requirements and standards of the Village.

(2) All subdivisions or certified survey maps creating lots that back onto an arterial or collector street shall design and place on the grading plans an earthen berm, the height and slope of which conform to the Engineering Design Manual. The berm shall be landscaped with appropriate plantings to provide a visual screen from casual view.

(3) After approval or modification of these plans by the Village Engineer, the full width of the right-of-way of the proposed streets within the subdivision and the entire subdivision lot area shall be graded in accordance with the master site-grade plan. The owners of the subdivision lots shall adhere to those plans.

(4) Upon completion of all street and subdivision grading, the grades shall be checked by the Village Engineer and certified by the subdivider to determine that the completed grading work is in accordance with the master site grading plan.

(5) The cost of all required grading work, supervision, certification, inspection and engineering fees shall be paid for by the subdivider.

(b) Right-of-Way Grading. The subdivider shall grade the full width of the right-of-way of all proposed streets in accordance with the Village approved specifications and plans, including the grading of site triangles at each intersection. The grading shall take into account the locations of trees and attempt to preserve them.

(c) Block Grading. Block grading shall be completed by one or more of the following methods:

(1) Regrading along the side or rear lot lines which provides for drainage to the public drainage facilities.

(2) Parts of all lots may be graded to provide for drainage to a ditch or to a swale, provided any ditches or swales are in public drainage easements.

(3) Draining across rear or side lot lines may be permitted provided that the course of drainage is within a public drainage easement and is toward public drainage facilities.

(d) Miscellaneous Grading Requirements.

(1) Grading shall be in conformance with the Engineering Design Manual.

(2) The topsoil stripped for grading shall not be removed from the site unless identified in the Erosion Control Plan approved by the Village Engineer as not being necessary for erosion control or site landscaping purposes. Topsoil shall be uniformly returned to the lots when rough grading is finished. Topsoil piles shall be leveled and seeded for erosion control in accord with Village-approved specifications prior to the Village releasing the two year guarantee provision on public improvements in the streets adjacent to the lots on which the topsoil is stockpiled.

1 **Reserved.**

PARK AND PUBLIC LAND DEDICATIONS

Sec. 54.140 General Park and Public Land Dedication Requirements.

(a) Parks and Other Public Areas. In order that adequate open spaces and sites for public uses may be properly located and preserved as the community develops, and in order that the cost of providing the public park and recreation sites and facilities necessary to serve the additional families brought into the community by subdivision development may be most equitably apportioned on the basis of the additional need created by the individual subdivision development, and coordinated with the environmental pattern and land use goals established by the Village, the following provisions of this Article are established.

(b) Consideration in Plat Layout. In the design and layout of plats, consideration shall be given to the provision of the foregoing open space and public use areas that are compatible with the specific terrain and related use characteristics of the site and would serve to implement the recommendations of the Comprehensive Master Plan of the Village.

(c) Dedication of public access to water. Subdivisions abutting on a navigable lake or stream shall, according to the provisions of Wisconsin Statutes 236.16(3), provide access at least 60 feet wide to the low water mark so that there will be public access, which is connected to existing public roads not more than at one-half-mile intervals as measured along the lake or stream shore, except where greater intervals and wider access is agreed upon by the state department of natural resources and the state department of development, and excluding shore areas where public parks or open spaces and streets or roads on either side of a stream are provided. Such access shall be dedicated to the Village.

Sec. 54.141 Land Dedication.

(a) Dedication. Within the Village, a subdivider shall be required to dedicate sufficient land area to implement the Village's recommendations for bikeway purposes, pertaining to their property, as set forth in the Village's Comprehensive Master Plan. In areas of the Village where the Official Map has bikeway areas, these areas shall be dedicated for such use as the land adjacent to it is platted.

<u>Payment in Lieu of Dedication.</u>

(1) For all residential developments, a fee as set forth in the Municipal Code shall be paid for each new dwelling unit or lot.

(2) All payments shall be made in full to the Village prior to Board of Trustees approval of the land division or development.

Sec. 54.142 Development of Park Area.

(a) When parklands are dedicated to the Village, the subdivider may be required by the Village Engineer to:

(1) Properly grade and contour for proper drainage;

(2) Provide surface contour suitable for anticipated use of area as approved by the Village Engineer; and

(3) Cover areas to be seeded in accord with Village-approved specifications. It shall be the responsibility of the subdivider to maintain the area until the Village accepts the dedication.

(b) It shall be the responsibility of the Village to maintain the dedicated areas upon their dedication and acceptance by the Village.

(c) The Board of Trustees may require certification of compliance by the subdivider with the applicable provisions of this chapter. The cost of such report shall be paid by the subdivider.

(d) If the subdivider fails to satisfy the requirements of this Section, the Board of Trustees may contract said completion and bill such costs to the subdivider, following a public hearing and written notice to the subdivider of noncompliance. Failure to pay such costs may result in the immediate withholding of all building permits until such costs are paid.

(e) The subdivider shall pay all costs of public improvements in the public streets adjacent to or within all public and/or park lands.

1 **Reserved.**

FEES

Sec. 54.160 Administrative and Other Fees.

(a) General. The subdivider shall pay the Village all fees as hereinafter required and at the times specified before being entitled to recording of a plat or certified survey map. At the time of submission of a plat or certified survey, the Plan Commission, at its sole discretion, may require the subdivider to make a good faith deposit with the Village Treasurer to cover, in all or part, the expenses anticipated to be incurred by the Village because of the land division. Unused portions of such fund may be refunded to the subdivider.

(b) Engineering Fee. The subdivider shall pay a fee equal to the actual cost to the Village for all engineering work incurred by the Village in connection with the plat or certified survey map, including inspections required by the Village pursuant to Section 54.102(c). [See page 26] The subdivider shall pay a fee equal to the actual cost to the Village for such engineering work and inspection as the Board of Trustees and/or Village Engineer deems necessary to assure that the construction of the required improvements is in compliance with the plans, specifications and ordinances of the Village or any other governmental authority. Engineering work shall include the preparation of construction plans, standard specifications, inspection, and administration of the engineering work.

Administrative Fees.

(1) The subdivider shall pay a fee to the Village equal to the cost of any legal, administrative or fiscal work which may be undertaken by the Village in connection with the plat or certified survey map.

(2) All land division documents and requests for vacation of street right-of-way shall be accompanied by the appropriate fee as required by the Municipal Code.

(c) Concept Plan. There shall be no fee for the Village's review of a concept or sketch plan of a proposed land division. However, such reviews shall be conducted only as staff time permits.

(d) Filing Fees. All land division documents and requests for vacation of street right-of-way shall be accompanied by the appropriate fee as set forth in the Municipal Code.

(e) Objecting Agency Review Fees. The subdivider shall transmit all fees required for state and county agency review to the Village Clerk at the time of application. Said review fees shall be retransmitted to the proper state and county review agency by the Village Clerk. Said fees shall be applicable, where appropriate, to review fees required by the Wisconsin Department of Administration and the County Planning Department.

(f) Taxes and Assessments. All outstanding assessments, personal property taxes, real estate taxes and all other debts due to the Village shall be due prior to the signing of the Final Plat or Certified Survey map by the Village.

Sec. 54.161 Levy of Special Assessments.

The cost of installing or constructing any public work or improvement by the Village may be charged under this section, in whole or in part, to the property benefited by such work or improvement and the Board of Trustees may levy an assessment against such benefited property in the manner provided herein.

Sec. 54.162 Includable Costs.

(a) The cost of any work or improvement to be paid in whole or in part by special assessment levied against property may include the following:

(1) The direct and indirect cost thereof;

(2) The damages occasioned thereby;

(3) The interest on bonds or notes issued in anticipation of the collection of the assessments;

(4) A reasonable charge for the services of the administrative staff of the Village;

(5) The cost of any architectural, engineering and legal services;

(6) Any other items of direct or indirect cost, which may reasonably be attributed to the proposed work or improvement.

(7) The amount to be assessed against all property for any such proposed work or improvement shall be apportioned among the individual parcels in the manner designated by the Board of Trustees.

(b) The amount assessed against any property for any work or improvement, which represents an exercise of the Village's taxing power, shall not exceed the actual value of the benefits conferred on the property. An assessment levied under the police power must benefit the property and the assessment shall be levied on a reasonable basis as determined by the Board of Trustees.

Sec. 54.163 Engineer's Report.

Prior to levying a special assessment, the Board of Trustees, by preliminary resolution, shall direct that special assessments be levied and shall direct that the Village Engineer prepare and file with the Village Clerk, for public inspection, his/hers report which shall consist of:

(a) A copy of the preliminary or final plans and specifications of the proposed work or improvement.

(b) An estimate of the entire cost of the proposed work or improvement or the actual cost thereof based on contracts awarded.

(c) An estimate of that portion of the total cost of the improvement to be levied against the benefited properties.

(d) An estimate, as to each parcel of property affected, of:

(1) The assessment of benefits to be levied.

(2) The damages to be awarded for property taken, damaged, or adversely affected.

(3) The net amount of such benefits over damages or the net amount of such damages over benefits.

(4) A statement that the property against which the assessments are proposed is benefited, where the work or improvement constitutes an exercise of the police power. In such cases the estimates required under Subsection (d) above, shall be replaced by a schedule of the proposed assessments.

Sec. 54.164 Notice and Hearing.

Upon completion and filing of the Engineer's Report, the Village Clerk shall cause notice to be given stating the nature of the proposed work or improvement, the general boundary lines of the proposed assessment district or area including, in the discretion of the Board of Trustees, a small map thereof, the place and time at which all persons interested, or their agents or attorneys, may appear before the Board of Trustees and be heard concerning the matters contained in the report. Such notice shall be published as a Class 1 notice, under chapter 985 Wisconsin Statutes. A copy of such notice shall be mailed, at least ten days before the hearing or proceeding, to every interested person whose post office address is known, or can be ascertained with reasonable diligence. The hearing shall commence not less than ten and not more than 40 days after publication of the notice.

Sec. 54.165 Waiver of Notice and Hearing.

The Board of Trustees may, without any notice or hearing hereunder, levy and assess the whole or any part of the cost of any municipal work or improvement as a special assessment upon the property benefited thereby whenever notice and hearing thereon is waived in writing by all the owners of property affected by such special assessment.

Sec. 54.166 Resolution Levying Assessments.

After hearing persons interested in the proposed assessment levy, the Board of Trustees may approve, disapprove, or modify the proposed assessments or it may refer the report to the Engineer with such direction, as it deems necessary to accomplish a fair and equitable assessment. Upon approval of the Engineer's report, the Board of Trustees shall adopt a resolution levying the special assessment as finally approved. The resolution shall contain the following:

(a) Confirmation of the Engineer's report

(b) A determination that the proposed work or improvement constitutes an exercise either of the police power, or the taxing power.

(c) A determination that the assessments may be paid in annual installments and the number and due date of such installments and the interest thereon pursuant to Section 66.54(7), Wisconsin Statutes.

(d) A statement, if applicable, that the assessments or a portion of the assessments so levied is long term 20 year pursuant to Section 66.605, Wisconsin Statutes.

Sec. 54.167 Reserved.

Sec. 54.168 Appeal of Special Assessments.

Any person having an interest in any parcel of land affected by any determination of the Board of Trustees may appeal there from to the Door County Circuit Court in the manner provided in Section 66.60(12), Wisconsin Statutes.

Sec. 54.169 Property Excluded from Special Assessment.

If any property included within the proposed assessment district or area shall be excluded from assessment, the proposed assessment shall be computed and paid by the Village, Water and Sewer Utility, or storm water drainage district as determined by the Board of Trustees.

Sec. 54.170 Special Charges.

Special charges for services rendered by the Village may be imposed by the Board of Trustees pursuant to Section 66.60(16), Wisconsin Statutes.

Sec. 54.171 Payment Plans.

(a) Except those properties that are subject to subsection (b) the property owner may pay special assessments as follows:
  (1) Within 30 days of the date of the levy.
  (2) Within five years of the date of the levy in equal annual installments on the property tax bill with interest as determined in the final assessment resolution.
  (3) Within ten years of the date of the levy in equal annual installments on the property tax bill with interest as determined in the final assessment resolution.

(b) For those properties which are vacant or have one residential dwelling unit, that are two and one-half (2 ½) acres or more in area, or have 330 feet or more of assessed frontage, payment shall be made within 20 years of the date of the levy in equal annual installments on the property tax bill with interest as determined in the final assessment resolution.

Sec. 54.172 Existing Deferred Special Assessments.

(a) The Village Clerk shall keep a record of all existing deferred and active special assessments. The annual tax bill for each property subject to a deferred special assessment shall indicate this condition by inserting the word "Deferred" under the special assessment column.

(b) Before the issuance of any building or plumbing permit, the Zoning Administrator or designee shall refer the application for permit to the Village Clerk to determine if any special assessment is outstanding against the parcel involved.

(c) The Village will comply with the assessment and deferment conditions as previously established by assessment resolution unless the property owner(s) so affected agree to a change.

Sec. 54.173 Village Owned Property.

There shall be no special assessment levied against Village property. The cost of the project which otherwise would be levied against Village property shall be the Village's financial responsibility.

Sec. 54.174 Notice of Levy of Special Assessment.

An Assessment Notice shall be mailed to each affected property owner after final determination of all costs and computations for all affected properties has been completed.

Sec. 54.175 Schedule of Rates for Assessments.

The Board of Trustees shall annually determine and establish assessment rates.

Sec. 54.176 Oversizing Rates and Policy.

The schedule of rates and the policy on oversizing shall be determined and adopted by the Board of Trustees by Resolution, pursuant to the Municipal Code.

Sec. 54.177 Reserved.

Sec. 54.178 Corner Parcels.

(a) When special assessments are determined on a front foot basis and a corner

lot abuts the work or improvement, the assessment against the parcel shall be determined as follows:

(b) When the improvement is installed abutting both the long frontage side and the short frontage side of a corner parcel, the assessment shall be determined by multiplying the full per foot assessment rate times the sum of the short side frontage plus that portion of the long side frontage in excess of 100 feet.

(c) When the improvement is installed abutting only the long frontage side of a corner parcel, and no previous assessment for the same improvement has been made, the assessment shall be determined as in (a) above.

(d) When the improvement is installed abutting only the short frontage side of a corner parcel, and no previous assessment for the same improvement has been made, the assessment shall be determined by multiplying the full per foot assessment rate times the length of the short side.

(e) When the improvement is installed abutting only the long frontage side of a corner parcel, and a previous assessment for the same improvement has been made for the short side, the assessment shall be determined by multiplying the full per foot assessment rate times that portion of the long frontage side in excess of 100 feet.

(f) When the improvement is installed, abutting only the short frontage side of a corner parcel and a previous assessment has been made for the long side, there shall be no additional assessment for the initial 100 feet of the short side. The portion in excess of 100 feet shall be assessed under the provisions of subsection (b) above.

(g) If the improvement is installed on either the long frontage side or short frontage side of a parcel previously assessed for the same improvement, and no corner lot computation was made, the assessment shall be determined by adding the short side frontage to that portion of the long side frontage in excess of 100 feet, and from that sum subtracting the previously assessed frontage, and then multiplying the full per foot assessment rate times the difference.

Sec. 54.179 Double Frontage Parcels.

(a) When special assessments are determined on a front foot basis and a double frontage parcel (a parcel that runs through an entire block and has frontage on two different streets or public rights-of-way) abuts the work or improvement, the assessment against the parcel shall be determined as follows:

(b) If, after an investigation and report by the Zoning Administrator, the Board of Trustees determines that under the provisions of the zoning ordinance it is possible to divide the parcel into two parcels, one fronting each street, the parcel shall be subject to an assessment for each frontage when the improvement abutting the frontage is installed. In such cases, the assessment against each frontage shall be determined and treated as separate assessments. The assessment for the vacant frontage shall be assessed under the provisions of Section 54.178.

(c) If such a parcel cannot be divided to create two parcels, there shall be no assessment for the same benefit from the same type of improvement installed abutting the second frontage.

(d) The assessment shall become due as specified by the resolution levying special assessments for that frontage which abuts the assessable improvement.

Sec. 54.180 Lots Created by Re-division or Combination.

An investigation shall be made by the Zoning Administrator to determine if a parcel, under the provisions of the zoning ordinance, may reasonably be divided or combined in such a way as to create additional parcels. The results of this investigation shall be reported to the Board of Trustees, which shall determine the special assessments on a reasonable, case-by-case, basis.

Sec. 54.181 Reconstruction Jurisdiction and Policy.

(a) The following criteria shall apply:

(1) Reconstruction of sanitary sewer and water main are under the jurisdiction of the Sister Bay Water and Sewer Utility.

(2) Those facilities under the jurisdiction of the Village include the following: storm sewer, drainage

ditches, detention and retention structures, storm water management districts, laterals, streets, sidewalks, bike paths, bridges, culverts and headwalls, street lighting, street trees, parks, playgrounds, and Village installed service connections.

(b) Reconstruction assessment shall be based on a combination of the zoning category of a property and the road classification, by use, of the street in which the facility assessed is located. For facilities installed in easements, the zoning category of a property shall be the only consideration in assessing reconstruction costs. The effective rate of assessment shall be obtained from the appropriate Schedule of Rates table, which applies to the facility, which has been reconstructed.

(c) The policies and rates of assessment for reconstruction of facilities under Village jurisdiction shall be determined and approved by the Board of Trustees and shall be set forth by Ordinance. The rates set by this Ordinance shall be effective beginning on 1 January and shall apply for the entire calendar year.

Sec. 54.182 Other Authority Retained.

It is not intended by the enactment of this ordinance to deprive the Board of Trustees of any power conferred by Sections 66.53 through 66.698, Wisconsin Statutes, but any limitations contained therein and any procedures prescribed therein for the levy of special assessments or special charges shall not apply to the exercise of the special assessment authority contained herein.

1 **Reserved.**

VARIATIONS; PENALTIES AND VIOLATIONS

Sec. 54.190 Variations and Exceptions.

(a) Where the subdivider alleges that extraordinary hardships or particular difficulties may result from strict compliance with these regulations, he/she may request variations or exceptions to the regulations so that substantial justice may be done and the public interest secured, provided that such variation or exception shall not have the effect of nullifying the intent and purpose of this chapter. Application for any such variation shall be made in writing by the subdivider to the Village Clerk at the time when the Preliminary Plat or certified survey is filed for consideration, stating fully all facts relied upon by the petitioner, and shall be supplemented with maps, plans, or other additional data which may aid Village officials in the analysis of the proposed project. The plans for such development shall include such covenants, restrictions or other legal provisions necessary to guarantee the full achievement of the plan. The Zoning Administrator may request that the Village Engineer, Village Attorney or other officials review each situation to insure that the request is consistent with the requirements and standards of this chapter. The Zoning Administrator shall refer the matter to the Plan Commission with a written report and recommendation. The Plan Commission shall make a recommendation to the Board of Trustees. The previous granting of variations or exceptions in the same or similar circumstances shall not, of itself, constitute grounds for the granting of a variance or exception, nor shall strictly financial rationale.

(b) The Plan Commission shall not recommend nor shall the Board of Trustees not grant variations or exceptions to the regulations of this chapter unless it shall make findings based upon the evidence presented to it in each specific case that:

(1) Failure to grant the variation may be detrimental to the public safety, health or welfare or injurious to other property or improvements in the neighborhood in which the property is located;

(2) The conditions upon which the request for a variation is based are unique to the property for which the variation is sought and are not applicable generally to other property;

(3) Because of the particular physical surroundings, shape or topographical conditions of the specific property involved, a particular hardship to the owner would result, as distinguished from a mere inconvenience, financial hardship or self-imposed hardship, if the strict letter of the regulations were carried out.

(4) There would be no costs (present or future) to the Village resulting from the granting of the variation or exception.

(c) Any recommendations for variations or exceptions by the Plan Commission must be approved by a three-fourths (3/4) majority vote of the Plan Commission and shall be so endorsed by the Zoning Administrator and transmitted to the Board of Trustees. The Board of Trustees, if it approves, shall do so by resolution adopted by a majority vote and shall instruct the Village Clerk to notify the Plan Commission and the subdivider.

(d) Variations from the strict application of this chapter may also be granted in accordance with this chapter in the case of Planned Unit Developments provided the Board of Trustees, upon review and recommendations from the Plan Commission, shall find that the proposed development is fully consistent with the purpose and intent of this chapter, Village Zoning Ordinances, and any Village comprehensive plan.

Sec. 54.191 Enforcement, Penalties and Remedies.

(a) Violations. It shall be unlawful to build upon, divide, convey, record or monument any land in violation of this chapter or the Wisconsin Statutes and no person shall be issued a building permit by the Village authorizing the building on, or improvement of, any subdivision, land division, certified survey, or replat within the

jurisdiction of this chapter not of record as of the effective date of this chapter until the provisions and requirements of this chapter have been fully met. The Village may institute appropriate action or proceedings to enjoin violations of this chapter or the applicable Wisconsin Statutes.

(b) Penalties.

(1) General Violations. Any person, firm or corporation who fails to comply with the provisions of this chapter shall, upon conviction thereof, be subject to forfeiture as prescribed in the Municipal Code. Each day a violation exists or continues shall constitute a separate offense.

(2) Forfeiture for Not Proper Recording. Any person causing his/hers final plat to be recorded without submitting such plat for approval as herein required, or who shall fail to present the same for record within the time specified after approval shall be subject to the forfeiture as prescribed in the Municipal Code.

(3) Transfer of Lots in Unrecorded Plat. Any subdivider or his/hers agents who offers or contracts to convey, or conveys, any subdivision as defined in Sec. 236.02(8), Wisconsin Statutes, or lot or parcel which lies in a subdivision as defined in Sec. 236.02(7), Wisconsin Statutes, knowing that the final plat thereof has not been recorded may, upon conviction, be subject to the forfeiture as prescribed in the Municipal Code.

(4) Penalty for Disturbing or Not Placing Monuments. Any owner, surveyor or subdivider who fails to place monuments as prescribed by this chapter when subdividing land shall be subject to the forfeiture as prescribed in the Municipal Code.

(5) Knowingly Removing or Disturbing Monuments. Any person who knowingly removes or disturbs any monument or survey marker within the Village without permission of any governing authority or who fails to report such disturbance or removal shall be subject to the forfeiture as prescribed in the Municipal Code.

(6) Failure to Replace Removed or Disturbed Monument. Any person who fails to replace properly any monument or survey marker by him removed or disturbed when ordered to do so by any officer of the Village shall be subject to the forfeiture as prescribed in the Municipal Code.

(7) Failure to Comply with the Master Site Grading Plan. Any property owner who fails to comply with the master site grading plan pursuant to Section 54.125(a) shall be subject to forfeiture as prescribed in the Municipal Code. Each day a violation exists or continues shall constitute a separate offense.

(8) Failure to Comply With the Official Map. Any person, firm, or corporation who fails to comply with the provisions of this section shall, upon conviction thereof, forfeit not more than two hundred dollars ($200.00) and not less than fifty dollars ($50.00) and cost of prosecution for each violation, and in default of payment of such forfeiture and costs shall be imprisoned in the Door County jail until payment thereof but not exceeding 30 days. No damages shall be allowed for the taking by any governmental agency, for street, highway, drainageway, or parkway purposes, any building erected in violation of this ordinance.

Revocation of Permits and/or Approvals.

(9) The Village Engineer or Zoning Administrator may revoke or suspend any permit or approval issued under the regulations of this chapter and may stop construction or use of approved materials, equipment, methods of construction, devices or appliances for any of the following reasons:

a. Whenever the Village Engineer shall find at any time that applicable ordinances, laws, orders, plans, specifications and agreements are not being complied with

and that the subdivider or his/hers contractor has refused to conform after written warning or instruction has been issued to him.

b. Whenever the continuance of any construction becomes dangerous to life or property.

c. Whenever there is any violation of any condition or provisions of the application for permit, or of the permit or of any approval.

d. Whenever, in the opinion of the Village Engineer or Zoning Administrator, the subdivider has provided inadequate management of the project.

e. Whenever any false statement or misrepresentation has been made in the application for permit, plans, drawings, data specifications or certified lot or plot plan on which the issuance of the permit or approval was based.

f. Whenever there is a violation of any of the conditions of an approval or occupancy given by the Village Engineer or Zoning Administrator for the use of all materials, equipment, methods of construction, devices or appliances.

(10) The notice revoking a permit or approval shall be in writing and may be served upon the applicant of the permit, owner of the premises and his/hers agent, if any, and/or on the person having charge of construction.

(11) A revocation placard shall also be posted upon the premises in question by the Village Engineer or Zoning Administrator.

(12) After the notice is served upon the persons as aforesaid and posted, it shall be unlawful for any person to proceed thereafter with any construction operation whatsoever on the premises, and the permit which has been so revoked shall be null and void, and before any construction or operation is again resumed, a new permit, as required by this chapter, shall be procured and fees paid therefore, and thereafter the resumption of any construction or operation shall be in compliance with the regulation of this chapter. However, such work as the Village Engineer or Zoning Administrator may order as a condition precedent to the reissuance of the building permit may be performed, or such work as he/she may require for the preservation of life and safety.

(13) Any appeals of such revocations or suspensions must be made in writing and within seven calendar days to the Village Clerk for consideration by the Board of Trustees at its next regularly scheduled meeting, provided the appeal is filed not less than seven days prior to the meeting date.

(14) The Zoning Administrator is hereby directed to withhold the issuance of building permits within the land division until compliance with the provisions of this chapter is obtained.

(15) The Zoning Administrator is hereby directed to withhold the issuance of occupancy permits within the land division if violations of this chapter may result in health or safety problems for the occupants.

Sec. 54.192 Disclaimers on Approvals.

(a) The purpose of requiring approvals under this chapter is to insure the health, safety, comfort, prosperity and general welfare of the Village. This chapter shall not be interpreted as placing any responsibility or liability on any Village official, Village employee, or the Village as a municipal corporation for the granting of approval, or the denial of any approval. All approvals rendered as part of this chapter shall be considered as being approved conditionally based on the information and circumstances apparent at that time.

(b) Approvals issued by the Village shall not be construed as an assumption or expres-

sion of any responsibility, warranty, or guarantee, for the design or construction of any improvements within the land division.

Sec. 54.193 Restrictions for Public Benefit.

Pursuant to Sec. 236.293, Wisconsin Statutes, any restriction placed on platted lands by covenant, grant of easement, land division, certified survey or consolidation approval, which was required by the Village and which names a public body or public utility as grantee, promisee or beneficiary, vests in the public body or utility the right to enforce the restriction by law or in equity against anyone who has interest in the land subject to the restriction. The restriction may be released or waived by resolution of the Board of Trustees.

1 **Reserved.**

DEFINITIONS

Sec. 54.200 Definitions.

In this chapter, all terms used which are defined in Ch. 236, Wisconsin Statutes, shall have the same meaning as ascribed thereto in the chapter, and as the chapter may hereafter be amended, unless otherwise defined in this chapter or unless the context and/or subject matter clearly indicates otherwise. All words used in the present tense include the future tense; the singular includes the plural and the plural the singular; the word "person" includes associations, copartnerships or corporations; "he/she" means "he/she" or "she" and "his/hers" means "his/hers" or "her"; and the term "shall" is mandatory while the word "may" is permissive. The following definitions shall be applicable in this chapter:

Bikeway. A bike route completely apart from a street and restricted to bicycle, pedestrian, and maintenance vehicle traffic.

Block. An area of land within a subdivision that is entirely bounded by a combination or combinations of streets, exterior boundary lines of the subdivision and streams or water bodies.

Building Setback Line. Lines drawn within a lot the appropriate distance, based upon the zoning district in which the lot is located, from the front, rear and side lot lines that identify the buildable area of the lot.

Butt Lots. Lots the rear lot lines of which abut the side lot lines of other lots platted in the same block not separated by an alley or other open space.

Commission. The Plan Commission created by the Board of Trustees pursuant to Sec. 62.23 of the Wisconsin Statutes.

Comprehensive Development Plan. A comprehensive plan prepared by the Village indicating the general locations recommended for the various functional classes of land use, places and structures and for the general physical development of the Village and includes any unit or part of such plan separately adopted and any amendment to such plan or parts thereof.

Concept Plan. A preliminary drawing, made to approximate scale, of a proposed land division for discussion purposes.

Condominium Development. A real estate development in which a condominium form of ownership pursuant to chapter 703, Wisconsin Statutes, is utilized.

Consolidation. Legally merging two or more recorded parcels into a single parcel.

Conveyance. Where the title or any part thereof is transferred by the execution of a land contract, deed or other legal means.

Correction Instruments. Any recordable document correcting distance, angles, directions, bearings, chords, block or lot numbers, and street names and shall include all other details concerning the corrected item(s) shown on a recorded plat.

Crosswalk. A public right-of-way across a block to be used by pedestrians and/or for underground utilities.

Division of Land. A division of a lot, parcel or tract of land by the owner thereof or the owner's agent for any purpose, including sale or development.

Drainageway. An open area of land, either in an easement or dedicated right-of-way, the primary purpose of which is to carry storm water on the ground surface in lieu of an enclosed storm sewer. Drainageways may serve multiple purposes in addition to their principal use including, but not limited to, maintenance, storm water detention, park development, and other related uses.

Easement. The area of land set aside or over or through which a liberty, privilege or advantage in land, distinct from ownership of the land, is granted to the public or some particular person or part of the public.

Engineering Design Manual. The publication published by the Village Engineer, and adopted by the Board of Trustees, that establishes uniform standards for the design and construction of public works improvements.

Final Plat. The final map, drawing or chart on which the subdivider's plan of subdivision is presented for approval and which, if

approved, will be submitted to the County Register of Deeds for recording.

Flood Fringe. Those flood lands, outside the floodway, subject to inundation by the 100-year recurrence interval flood. For the purpose of zoning regulation, the flood fringe consists of the Flood Fringe Overlay District. The unobstructed flood fringe does not provide for conveyance of floodwaters, but does provide flood storage area during a flood event.

Floodplain. That land which has been or may be hereafter covered by the flood water during the "regional flood" or 100-year recurrence interval flood. The floodplain includes the floodway and the flood fringe, and may include other floodplain designations for regulatory purposes.

Floodway. A designated portion of the 100-year floodplain that will safely convey the regulatory flood discharge with small, acceptable upstream and downstream increases, limited in Wisconsin to 0.01 foot unless special legal measures are provided. The floodway, which includes the channel, is that portion of the floodplain not suited for human habitation.

Lot Area, Gross. The total area within the lot lines of a lot, including any streets rights-of-way.

Lot Area, Net. The total area within the lot lines of a lot, excluding any street rights-of-way.

Lot Depth. The average dimension of a parcel measured from the rear lot line to the front lot line along each side yard setback.

Lot Lines. The peripheral boundaries of a lot as defined herein.

Lot Width. The width of a parcel of land measured at the buildable area.

Lot, Corner. A lot situated at the junction of and abutting on two or more intersecting streets, or a lot at the point of deflection in alignment of a continuous street, the interior angle of which does not exceed one hundred thirty-five degrees (135°).

Lot, Through. A lot having a pair of opposite lot lines along two more or less parallel public streets and which is not a corner lot. On a "through lot," both street lines shall be deemed front lot lines.

Lot. A designated parcel, tract or area of land established by plat, subdivision, or as otherwise permitted by law, to be used, developed or built upon.

Master Plan. The composite of the functional and geographic elements of the master plan or any segment thereof in the form of plans, maps, charts and textual material as adopted by the Village in the form of General Development Plan, Zoning Ordinance, Official Map, Master Sanitary Sewer Plan, Master Storm Sewer Plan, Master Watermain Plan, any other planning documents, or a combination of any or all of them.

Minimum Street Right-Of-Way Width. All streets having widths specified on the master plan or official map and no full street right-of-way shall be less than 60 feet wide, unless the Board of Trustees shall otherwise permit by ordinance.

Official Map. A map indicating the location, width, and extent of existing and proposed streets, highways, drainageways, parks, playgrounds, and other facilities, as adopted by the Board of Trustees pursuant to Ch. 62.23(6), Wisconsin Statutes

Outlot. A portion of a subdivision or other land division not of standard "lot" size but provided as a remnant of the subdivision, the intention of which is to either redivide it in the future into "lots" or combine it with one or more other adjacent "outlots", "lots" or unplatted parcels to create a buildable lot.

Owner or Subdivider. Shall include any firm, association, partnership, private corporation, public or quasi-public corporation, or a combination of any of them, or other legal entity having sufficient proprietary interest in the land sought to be subdivided to commence and maintain proceedings to subdivide the same.

Parcel. Contiguous lands under the control of a subdivider whether or not separated by a combination of streets, exterior subdivision boundary lines, streams, or other water bodies.

Pedestrian Pathway. A public way which is intended for the convenience of pedestri-

ans only; it may also provide public right-of-way for utilities.

Person. Includes the plural as well as the singular and may mean any individual, firm, association, syndicate, partnership, corporation, trust, or any other legal entity.

Plan Commission. The Village Plan Commission.

Planned Unit Development or PUD. A form of development usually characterized by a unified site design for a number of housing units. The concept usually involves clustering of buildings, providing common open space, and mixing different types of housing (single family, duplexes, and multi-family). Ordinances permitting planned unit developments permit planning a project and calculating densities for the entire development rather than on an individual lot-by-lot basis. It is hereby declared that regulating planned unit developments require greater involvement of public officials in site plan review and development aspects of both zoning and land division regulation, since such developments require exceptions from both types of regulation.

Plat. A map of a subdivision.

Preliminary Improvement Plans. Existing topography, storm water detention analysis, sanitary sewer and water main system plans.

Preliminary Plat. The Preliminary Plat map, drawing or chart indicating the proposed layout of the subdivision to be submitted to the Village for its consideration as to compliance with the Comprehensive Development Plan and these regulations along with required supporting data.

Protective Covenants. Contracts entered into between private parties or between private parties and public bodies pursuant to Sec. 236.293, Wisconsin Statutes, which constitute a restriction on the use of all private or platted property within a subdivision for the benefit of the public or property owners and to provide mutual protection against undesirable aspects of development which would tend to impair stability of values.

Public Improvement. A public sewer, water mains, storm water relief provisions, highways and parkways, sidewalks, street lighting and shall include all other public improvements reasonably to be required by the Board of Trustees or the Plan Commission and shall not be limited because of enumeration and whether or not such improvements are shown on the official map.

Recording a Plat. The filing of the original of the final plat with the Register of Deeds.

Replat. The process of changing, or a map or plat which changes, the boundaries of a recorded subdivision plat or part thereof. The legal dividing of a large block, lot or outlot within a recorded subdivision plat without changing exterior boundaries of said block, lot or outlot is not a replat.

Residential Dwelling Unit or Dwelling Unit. A group of rooms including at least a kitchen or kitchenette, sanitary facilities, and a bedroom; and providing, or intended to provide, living quarters for not more than one family.

Right-of-Way. A public way dedicated to the public for its intended use.

Shorelands. Those lands within the following distances: one thousand (1,000) feet from the high-water elevation of navigable lakes, ponds and flowages or three hundred (300) feet from the high-water elevation of navigable streams or to the landward side of the floodplain, whichever is greater.

Sight Distance. A minimum sight distance affording clear visibility along the center line of all major streets.

Street, Alley. A public right-of-way affording only secondary access to abutting properties and not intended for general traffic circulation.

Street, Arterial. A public street or highway used or intended to be used to connect and serve collector streets, residential, commercial or industrial land uses. Arterial streets and highways include freeways and expressways, state trunk and county trunk highways, and other high use streets.

Street, Collector. A Street which will carry traffic from a minor street to a major street sys-

tem and includes principal entrance streets of developed areas and the primary circulating streets within a developed area.

Street, Cul-de-sac. A short street having but one end open to traffic and the other end being permanently terminated in a vehicular turnaround.

Street, Dead End. A street permanently or temporarily closed at one end, with or without turnarounds.

Street, Frontage. A minor street auxiliary to and located on the side of an arterial street for control of access and for service to the abutting development.

Street, Half Street. A street, either existing as or proposed to be, half of the required right-of-way width with the intention that the adjoining half will be platted at the time the adjoining lands are subdivided; or an existing street, of which, due to reasons of ownership, only half of the right-of-way is within the boundaries of a proposed land division or annexation.

Street, Local or Minor. A street designed to provide access to abutting property and leading into collector streets.

Street, Major. A public thoroughfare capable of accommodating continuity of fast or heavy traffic, having an established right-of-way width of at least one hundred twenty (120) feet.

Street, Private. A roadway created by an easement for use only by the abutting property owners which is not dedicated to the Village.

Street. A public way for pedestrians and vehicular traffic and utility access including, but not limited to, highways, thoroughfares, parkways, through highways, roads, avenues, boulevards, lanes, places, and courts, and any pavements, turf, fixtures, facilities, structures, plantings, signs, and other elements of the right-of-way.

Structure. Anything constructed or erected, the use of which requires more or less permanent location on the ground, or attached to something having permanent location on the ground, excepting public utility fixtures and appurtenances.

Subdivider. Any person, firm, corporation, agent, partnership, or entity of any sort, which divides or proposes to divide, by plat or certified survey, or replat land in any manner, including such heirs and assigns as may be responsible for the obligations of the subdivider under the provisions of this chapter.

Subdivision Design Standards. The guides, principles and specifications for the preparation of subdivision plans indicating, among other things, the minimum and maximum dimensions of the various elements set forth in the preliminary plat.

Subdivision. Subdivision is a division of a lot, parcel or tract of land by the owner thereof or the owner's agent for the purpose of sale or of building development where: a: The act of division creates five or more parcels, lots or building sites of one and one-half (1-1/2) acres each or less in area; or b: Five or more parcels, lots or building sites of one and one-half (1-1/2) acres each or less in area are created by successive divisions within a period of five years.

Village. The Village of Sister Bay, Wisconsin, and, where appropriate, it's Board of Trustees, commissions, committees and authorized officials.

Wetlands. An area where water is at, near or above the land surface long enough to be capable of supporting aquatic or hydrophytic vegetation and which has soils indicative of wet conditions. (Sec. 23.32(1), Wisconsin Statutes)

Wisconsin Administrative Code. The rules of administrative agencies having rule-making authority in Wisconsin, published in a loose-leaf, continual revision system, as directed by Sec. 35.93 and Chapter 227 of the Wisconsin Statutes, including subsequent amendments to those rules.

1 **INDEX**

abrogation, 3
administration, 11, 12, 13, 24, 31, 50
agriculture, 13
amendments, 4, 64
annexation, 29, 64
appeals, 58
application, 3, 11, 13, 14, 18, 25, 32, 50, 52, 56, 58
applications, 3
authority, 3, 4, 12, 13, 19, 22, 35, 43, 44, 50, 54, 57, 64
average, 42, 62
B-1 general business district, 27
B-2 downtown business transition district, 27
B-3 downtown business district, 27
bedroom, 63
berm, 45
bikeways, 24, 28, 37
block design standards, 41
boundaries, 14, 17, 18, 20, 29, 42, 62, 63, 64
building permit, 4, 25, 47, 56, 58
cemeteries, 17
certified survey map, 4, 11, 15, 21, 22, 25, 26, 34, 35, 36, 39, 45, 50
churches, 19, 39
compliance, 4, 5, 12, 26, 27, 39, 47, 50, 56, 58, 63
condominium, 5, 6, 33, 61
condominium developments, 5
conservation, 5
construction plans, 22, 26, 50
corner lot, 26, 42, 53, 62
CS-1 countryside district, 27, 33
curb, 24, 25, 27, 28, 37
curb and gutter, 27, 28
dedication, 6, 20, 36, 37, 44
definitions, 61
density, 5
development, 4, 5, 11, 12, 15, 16, 17, 18, 19, 22, 23, 24, 26, 30, 35, 36, 39, 40, 42, 43, 44, 45, 47, 56, 61, 62, 63, 64
districts, 17, 27, 33, 54
DNR, 30, 31
Door County, 5, 17, 25, 52
drainage, 5, 16, 18, 22, 24, 25, 26, 28, 36, 40, 42, 43, 44, 45, 47, 52, 54
drainage plan, 43
driveway, 5, 25, 28, 40
driveways, 5
dwelling unit, 47, 52, 63
dwellings, 19
easements, 21, 28, 30, 31, 34, 35, 43, 44, 45, 59, 61, 64
erosion control, 18, 35, 44, 45
establishment, 33
FAR, 28, 34
fences, 35
final plat, 6, 11, 12, 13, 14, 15, 19, 20, 21, 22, 26, 35, 36, 43, 44, 45, 50, 57, 61, 63
findings, 56
fire, 3, 15, 16, 33, 40
fire chief, 33, 40
flooding, 5, 16, 43
floodplain, 4, 62, 63
floodway, 62
flora, 5
government, 17
grading, 22, 23, 25, 26, 28, 33, 37, 45, 57
greater restrictions, 3
gutter, 24, 28, 37
hearing, 24, 51
hearings, 24
housing, 18, 63
I-1 institutional district, 27
institutional, 42
interpretation, 3
jurisdiction, 4, 5, 12, 44, 53, 54, 57
lakes, 18, 39, 63
land dedication, 47
land division, 1, 4, 5, 6, 9, 11, 15, 16, 21, 22, 23, 24, 35, 36, 37, 39, 42, 43, 44, 45, 47, 50, 57, 58, 59, 61, 62, 63, 64
land suitability, 5
landscaping, 5, 26, 33, 35, 45
light, 3, 35
loading, 42
loading dock, 42
lot area, 45, 62
lot width, 42, 62
lots abutting, 42
maintenance, 15, 20, 30, 32, 34, 35, 36, 61
maps, 39, 56, 62
minimum lot width, 42
motel, 33
motels, 33
municipal code, 1, 11, 13, 47, 50, 52, 57
natural features, 39, 42
occupancy permit, 6, 9, 26, 58
open space, 3, 15, 47, 61, 63
organization, 35

other permits, 5
over-sizing, 36
P-1 park district, 27
parking, 42
pedestrian, 18, 19, 28, 35, 42, 43, 61, 62
penalties, 56, 57
plan commission, 5, 6, 11, 12, 13, 14, 15, 16, 17, 19, 20, 26, 28, 34, 35, 39, 40, 41, 42, 43, 50, 56, 61, 63
planned unit development, 56, 63
planting strip, 19, 41
plat of survey, 25
platted, 4, 41, 42, 43, 44, 47, 59, 61, 63, 64
plumbing code, 30, 32
preliminary plat, 11, 12, 13, 14, 15, 17, 19, 26, 35, 36, 43, 56, 63, 64
public facilites, 15, 16, 21
public facilities, 15
public hearing, 47
public parks, 47
public sanitary sewer, 18
public services, 15, 16
public streets, 21, 42, 47, 62
PUD, 63
purpose, 3, 5, 6, 11, 40, 43, 56, 58, 61, 62, 64
purpose and intent, 56
R-1, 27, 33
R-2, 27
R-3, 27, 33
R-4, 27, 33
reconstruction, 53, 54
reduction, 23
regulations, 3, 4, 11, 13, 18, 24, 39, 42, 43, 56, 57, 63
restaurants, 33
retaining walls, 5, 35
review and recommendations, 12, 56
right-of-way, 17, 20, 22, 23, 25, 27, 28, 31, 34, 39, 40, 41, 43, 44, 45, 50, 61, 62, 63, 64
sanitary sewer system, 16, 43
sanitary sewers, 35
setback, 19, 42, 43, 61, 62
setback line, 19, 42, 43, 61
severability, 3
shopping centers, 18, 39, 42
shoreland, 18
shorelands, 63
sidewalk, 23, 24, 26, 28
sidewalks, 22, 24, 28, 37, 54, 63
signs, 35, 64
single-family, 19, 33
single-family dwellings, 19
site grading, 22, 23, 25, 26, 27, 28, 33, 37, 45, 57
site plan, 63
site plan review, 63
special assessments, 19, 24, 25, 30, 31, 37, 50, 51, 52, 53, 54
statutes, 3, 4, 5, 6, 12, 13, 14, 19, 20, 21, 22, 24, 28, 35, 39, 44, 47, 51, 52, 54, 56, 57, 59, 61, 62, 63, 64
storm water, 15, 16, 25, 28, 39, 43, 44, 52, 54, 61, 63
storm water drainage, 43
stormwater management system, 43
streams, 17, 18, 27, 39, 61, 62, 63
street lights, 35
street pavement, 17, 24, 28
street signs, 35
street trees, 35, 54
structure, 6, 9, 32, 64
subdivision, 4, 5, 6, 9, 11, 12, 13, 14, 17, 18, 19, 20, 21, 34, 36, 39, 41, 42, 43, 45, 47, 57, 61, 62, 63, 64
subdivision plat, 21, 43, 63
swales, 25, 26, 45
topography, 5, 16, 34, 39, 42, 45, 63
traffic, 6, 9, 11, 16, 28, 34, 35, 39, 40, 42, 61, 63, 64
traffic circulation, 63
transmission, 15, 35
treatment facilities, 15
tree, 27, 39, 42
unplatted, 4, 17, 62
utility commission, 15, 16
variance, 34, 56
variances, 34
village administrator, 15, 29
village attorney, 22, 23, 24, 36, 56
village engineer, 5, 6, 11, 13, 14, 15, 16, 17, 18, 19, 22, 23, 24, 25, 26, 27, 28, 29, 30, 31, 33, 34, 35, 36, 37, 39, 41, 43, 44, 45, 47, 50, 51, 56, 57, 58, 61
violations, 56, 57, 58
water main, 15, 17, 19, 22, 23, 27, 29, 30, 31, 32, 33, 36, 53, 63
water supply, 18, 33
water supply facilities, 33
wells, 31
zoning administrator, 5, 6, 9, 11, 12, 13, 15, 19, 23, 26, 27, 52, 53, 56, 57, 58
zoning code, 18, 42
zoning permit, 6, 9, 25, 40

MAP AND TEXT AMENDMENTS

This section contains a chronological record of changes to the Official Map or text of the Land Division Code.

March 8, 2005: The street cross sections were updated to reflect current design criteria and incorporated into the Design Manual.

April 12, 2005: Ordinance No. 108-041205 was adopted. This ordinance incorporated Ordinance 115 into the Land Division Code. Ordinance #115 was the original ordinance creating the Official Map on March 12, 1985. During the recodification process this ordinance was overlooked. The adoption of the ordinance did not change any of the mapping from 1985.

APPENDIX OF ILLUSTRATIONS

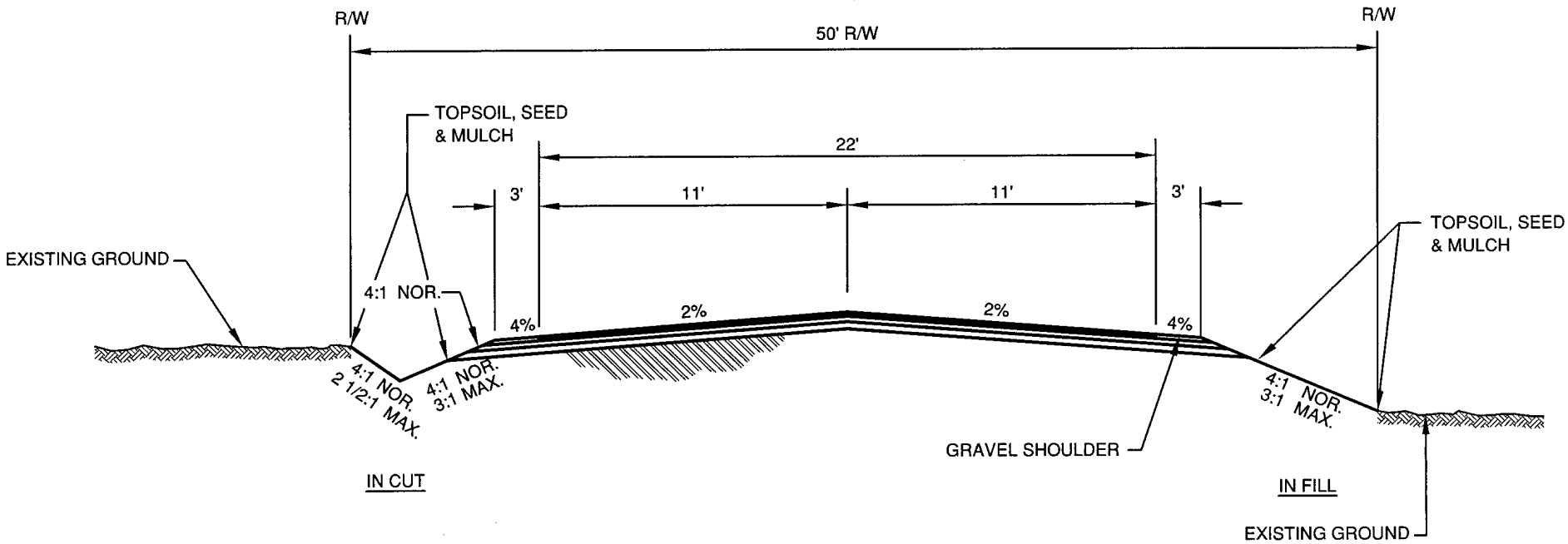

TYPICAL NEIGHBORHOOD STREET CROSS SECTION (NO PARKING)

NOTES: DEPENDING ON NUMBER OF DRIVEWAYS AND DENSITY OF ABUTTING PROPERTIES, AN ADDITIONAL TWO FEET OF PAVEMENT MAY BE REQUIRED ON SHOULDERS.

ROADWAY AND UTILITY CONSTRUCTION SHOULD BE COORDINATED WITH THE VILLAGE IN AN ATTEMPT TO MAINTAIN EXISTING TREES WITHIN THE RIGHT OF WAY.

R:\0200\0282\0282050\dwg\TYP_SECTION.dwg

CROSS SECTION NO. 1

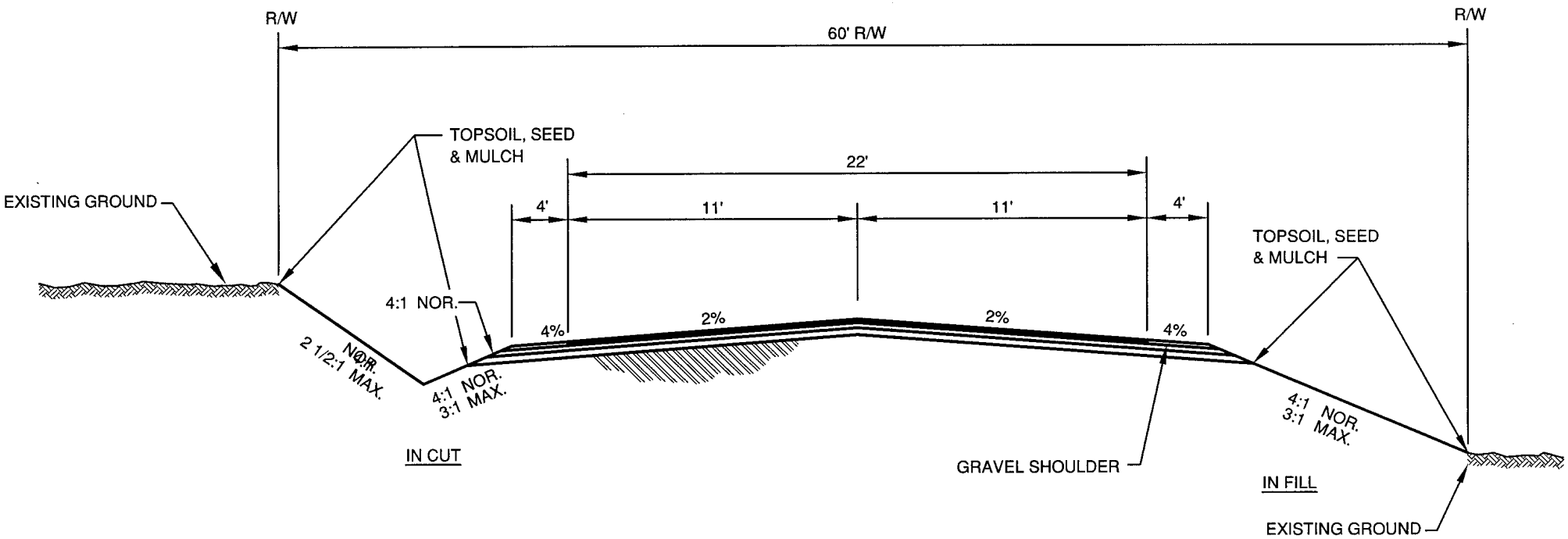

TYPICAL NEIGHBORHOOD/ARTERIAL STREET CROSS SECTION (NO PARKING)

NOTES: DEPENDING ON NUMBER OF DRIVEWAYS AND DENSITY OF ABUTTING PROPERTIES, AN ADDITIONAL TWO FEET OF PAVEMENT MAY BE REQUIRED ON SHOULDERS.

ROADWAY AND UTILITY CONSTRUCTION SHOULD BE COORDINATED WITH THE VILLAGE IN AN ATTEMPT TO MAINTAIN EXISTING TREES WITHIN THE RIGHT OF WAY.

R:\0200\0282\0282050\dwg\TYP_SECTION.dwg

CROSS SECTION NO. 2

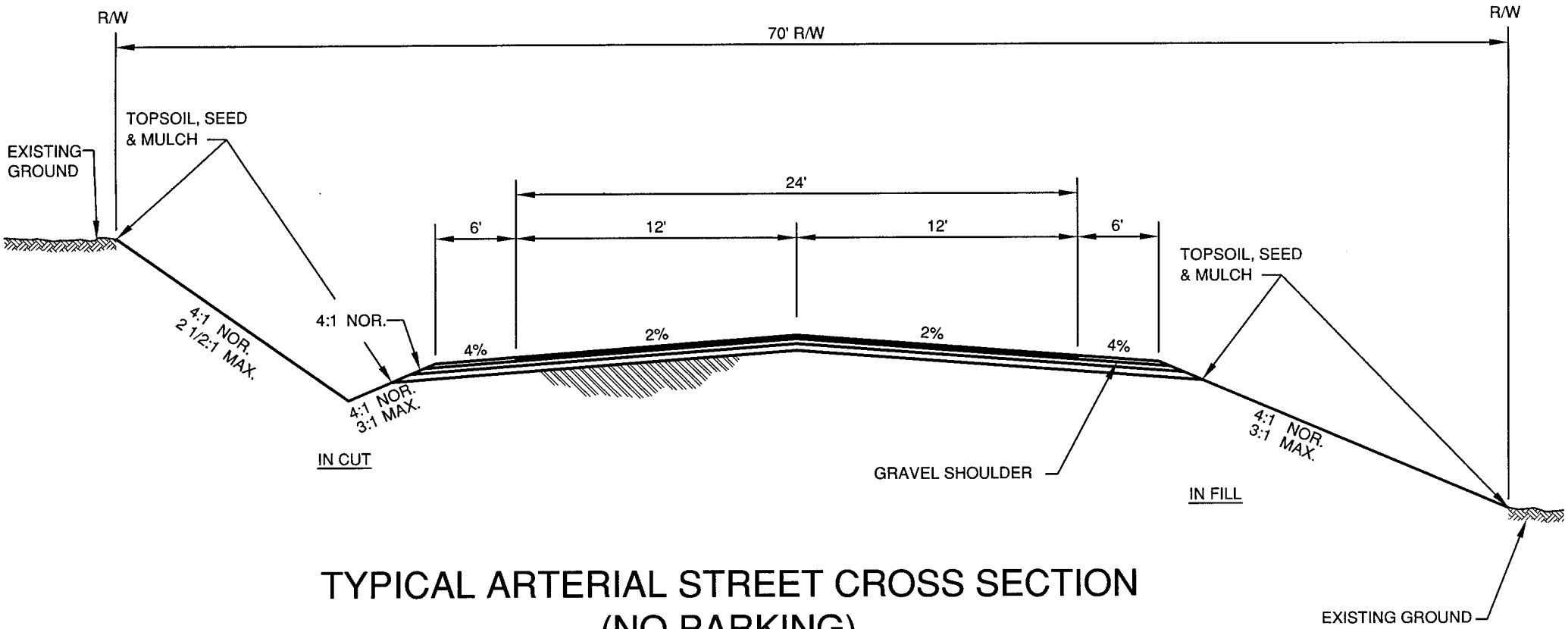

TYPICAL ARTERIAL STREET CROSS SECTION (NO PARKING)

NOTES: DEPENDING ON NUMBER OF DRIVEWAYS AND DENSITY OF ABUTTING PROPERTIES, AN ADDITIONAL TWO FEET OF PAVEMENT MAY BE REQUIRED ON SHOULDERS.

ROADWAY AND UTILITY CONSTRUCTION SHOULD BE COORDINATED WITH THE VILLAGE IN AN ATTEMPT TO MAINTAIN EXISTING TREES WITHIN THE RIGHT OF WAY.

R:\0200\0282\0282050\dwg\TYP_SECTION.dwg

CROSS SECTION NO. 3

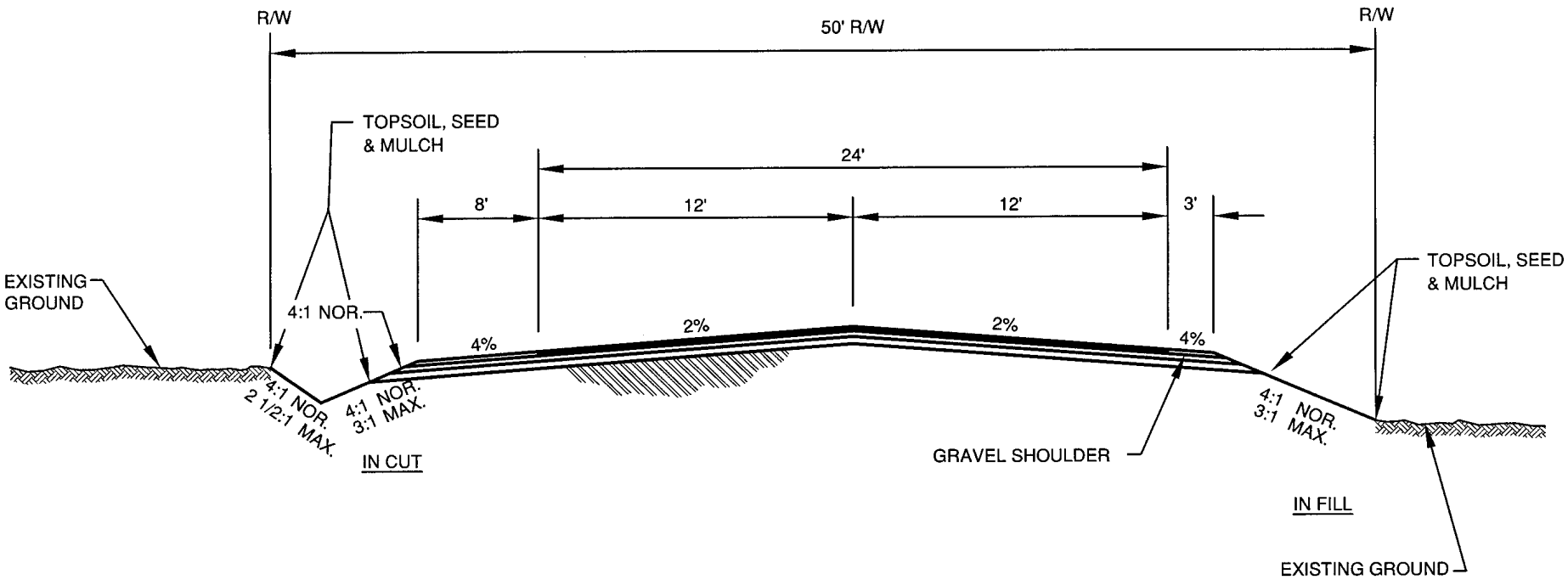

TYPICAL NEIGHBORHOOD STREET CROSS SECTION (PARKING 1 SIDE ONLY)

NOTES: DEPENDING ON NUMBER OF DRIVEWAYS AND DENSITY OF ABUTTING PROPERTIES, AN ADDITIONAL TWO FEET OF PAVEMENT MAY BE REQUIRED ON SHOULDERS.

ROADWAY AND UTILITY CONSTRUCTION SHOULD BE COORDINATED WITH THE VILLAGE IN AN ATTEMPT TO MAINTAIN EXISTING TREES WITHIN THE RIGHT OF WAY.

R:\0200\0282\0282050\dwg\TYP_SECTION.dwg

CROSS SECTION NO. 4

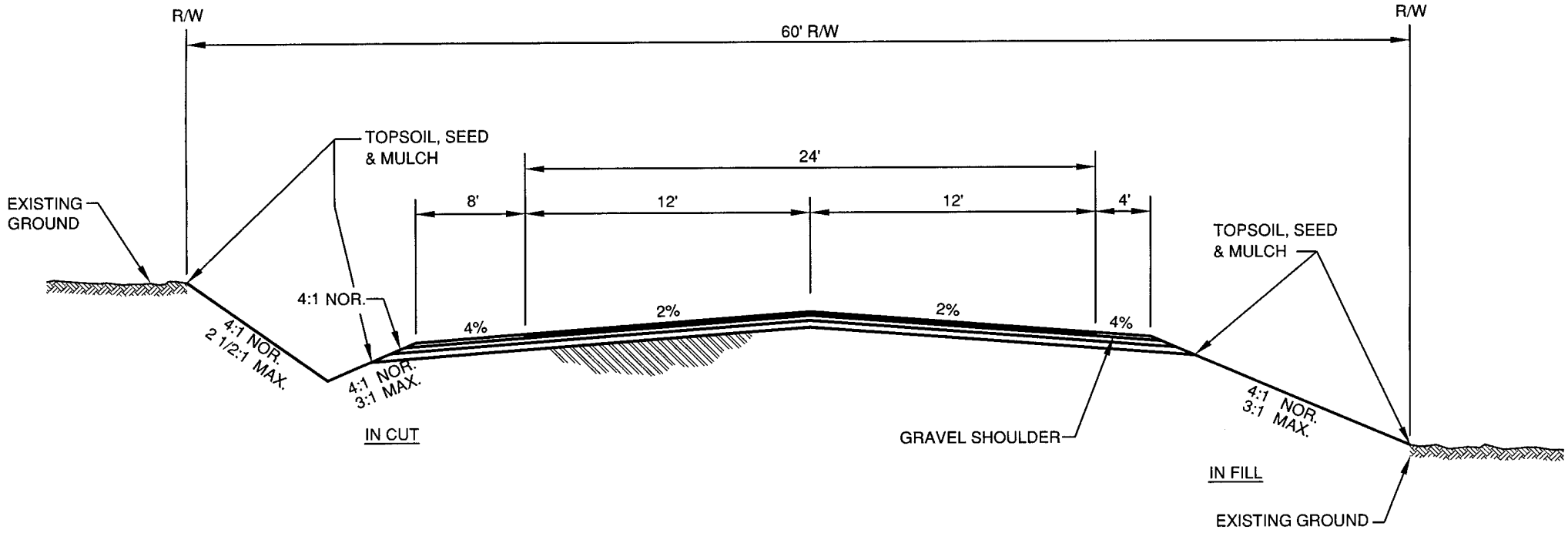

TYPICAL NEIGHBORHOOD/ARTERIAL STREET CROSS SECTION (PARKING 1 SIDE ONLY)

NOTES: DEPENDING ON NUMBER OF DRIVEWAYS AND DENSITY OF ABUTTING PROPERTIES, AN ADDITIONAL TWO FEET OF PAVEMENT MAY BE REQUIRED ON SHOULDERS.

ROADWAY AND UTILITY CONSTRUCTION SHOULD BE COORDINATED WITH THE VILLAGE IN AN ATTEMPT TO MAINTAIN EXISTING TREES WITHIN THE RIGHT OF WAY.

R:\0200\0282\0282050\dwg\TYP_SECTION.dwg

CROSS SECTION NO. 5

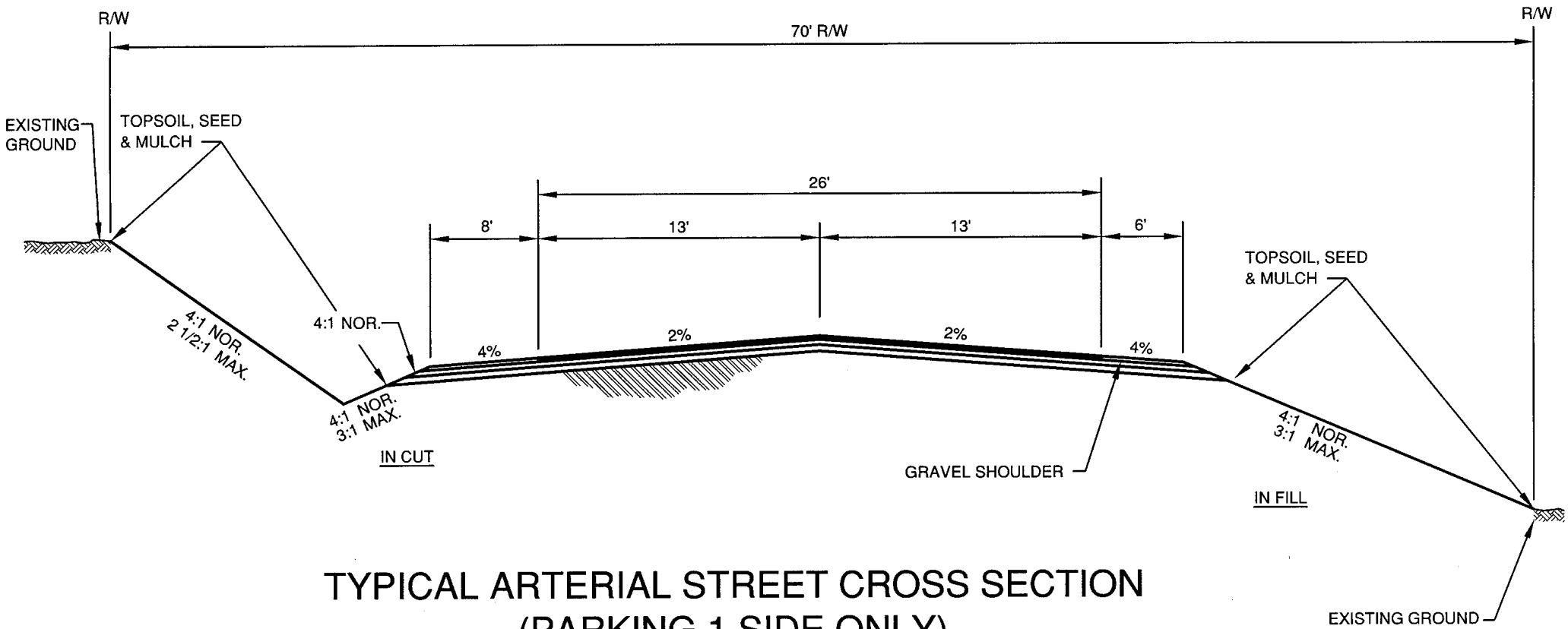

TYPICAL ARTERIAL STREET CROSS SECTION (PARKING 1 SIDE ONLY)

NOTES: DEPENDING ON NUMBER OF DRIVEWAYS AND DENSITY OF ABUTTING PROPERTIES, AN ADDITIONAL TWO FEET OF PAVEMENT MAY BE REQUIRED ON SHOULDERS.

ROADWAY AND UTILITY CONSTRUCTION SHOULD BE COORDINATED WITH THE VILLAGE IN AN ATTEMPT TO MAINTAIN EXISTING TREES WITHIN THE RIGHT OF WAY.

R:\0200\0282\0282050\dwg\TYP_SECTION.dwg

CROSS SECTION NO. 6

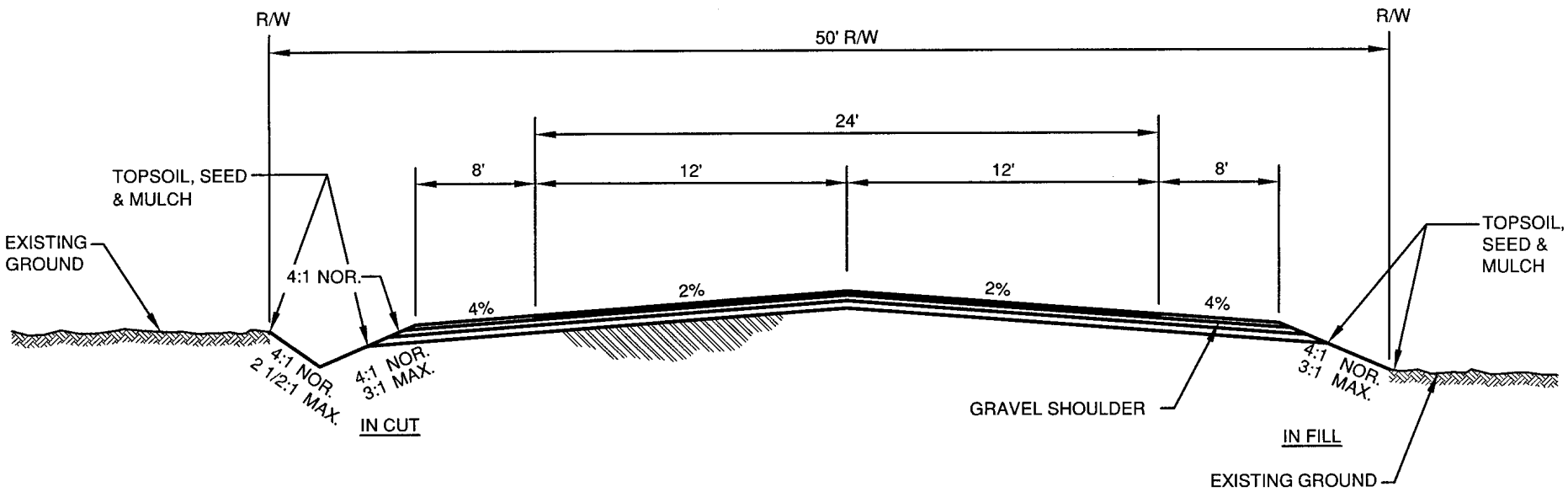

TYPICAL NEIGHBORHOOD STREET CROSS SECTION (PARKING 2 SIDES)

NOTES: DEPENDING ON NUMBER OF DRIVEWAYS AND DENSITY OF ABUTTING PROPERTIES, AN ADDITIONAL TWO FEET OF PAVEMENT MAY BE REQUIRED ON SHOULDERS.

ROADWAY AND UTILITY CONSTRUCTION SHOULD BE COORDINATED WITH THE VILLAGE IN AN ATTEMPT TO MAINTAIN EXISTING TREES WITHIN THE RIGHT OF WAY.

R:\0200\0282\0282050\dwg\TYP_SECTION.dwg

CROSS SECTION NO. 7

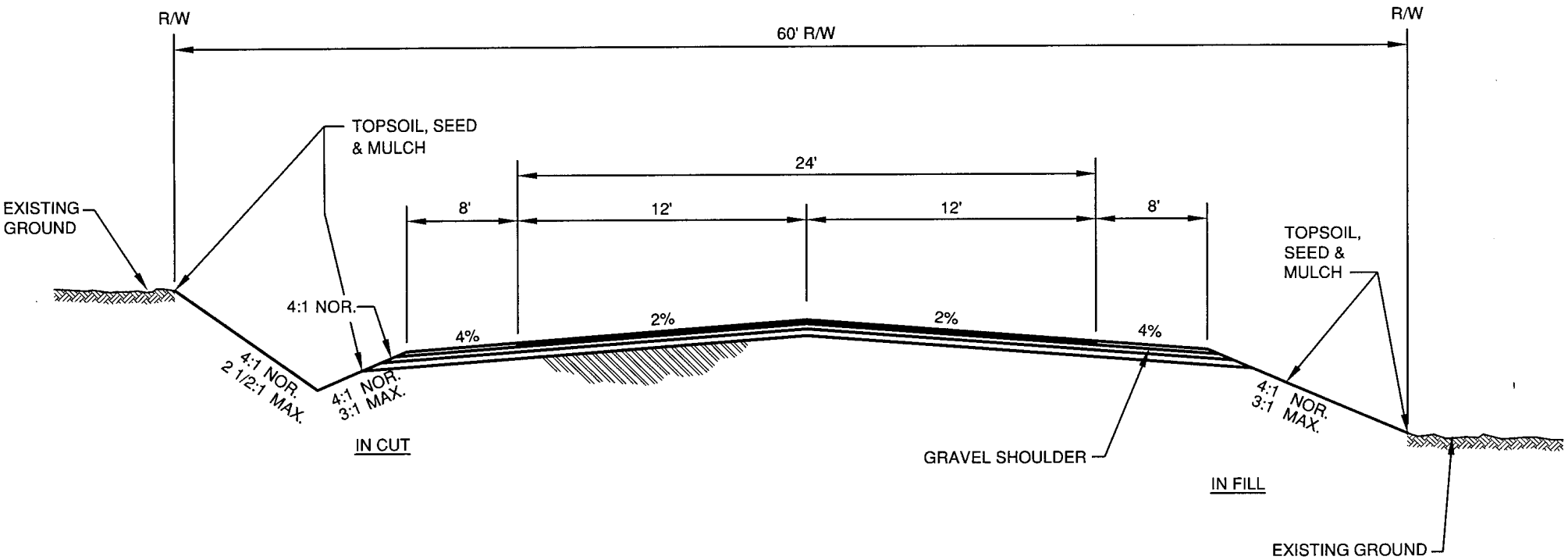

TYPICAL NEIGHBORHOOD/ARTERIAL STREET CROSS SECTION (PARKING 2 SIDES)

NOTES: DEPENDING ON NUMBER OF DRIVEWAYS AND DENSITY OF ABUTTING PROPERTIES, AN ADDITIONAL TWO FEET OF PAVEMENT MAY BE REQUIRED ON SHOULDERS.

ROADWAY AND UTILITY CONSTRUCTION SHOULD BE COORDINATED WITH THE VILLAGE IN AN ATTEMPT TO MAINTAIN EXISTING TREES WITHIN THE RIGHT OF WAY.

R:\0200\0282\0282050\dwg\TYP_SECTION.dwg

CROSS SECTION NO. 8

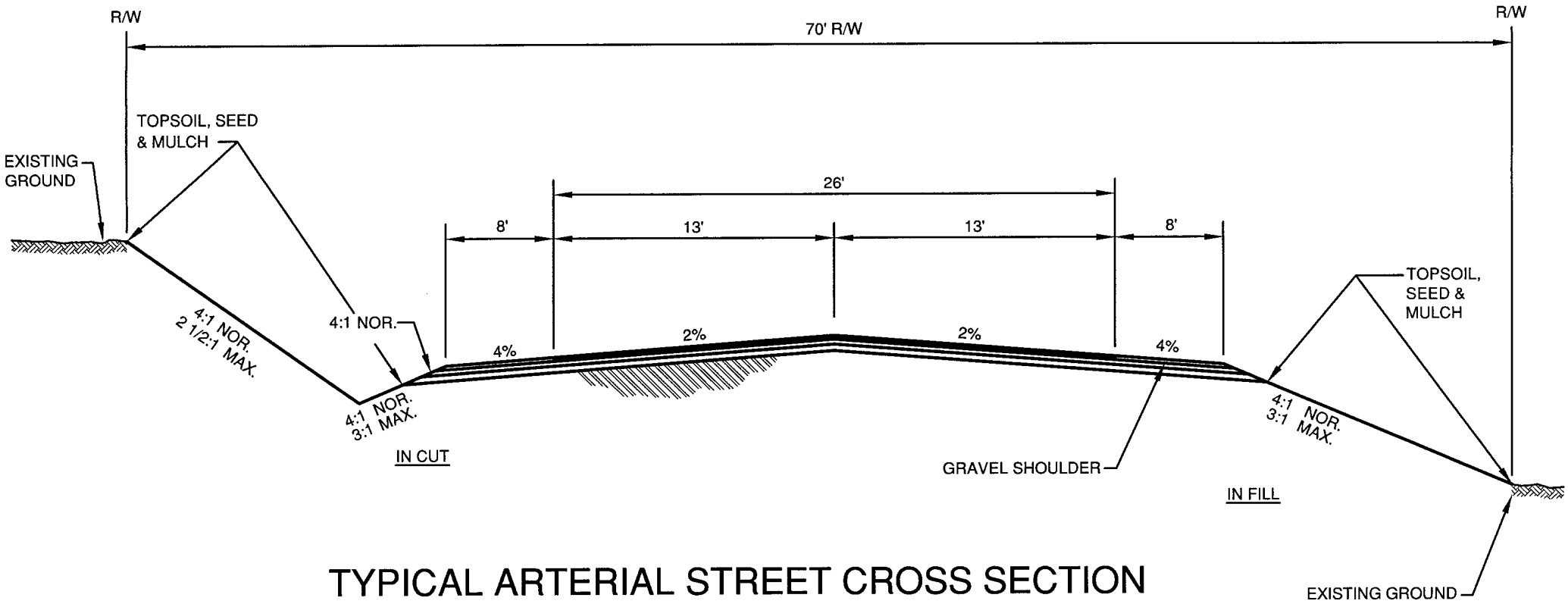

TYPICAL ARTERIAL STREET CROSS SECTION (PARKING 2 SIDES)

NOTES: DEPENDING ON NUMBER OF DRIVEWAYS AND DENSITY OF ABUTTING PROPERTIES, AN ADDITIONAL TWO FEET OF PAVEMENT MAY BE REQUIRED ON SHOULDERS.

ROADWAY AND UTILITY CONSTRUCTION SHOULD BE COORDINATED WITH THE VILLAGE IN AN ATTEMPT TO MAINTAIN EXISTING TREES WITHIN THE RIGHT OF WAY.

R:\0200\0282\0282050\dwg\TYP_SECTION.dwg

CROSS SECTION NO. 9

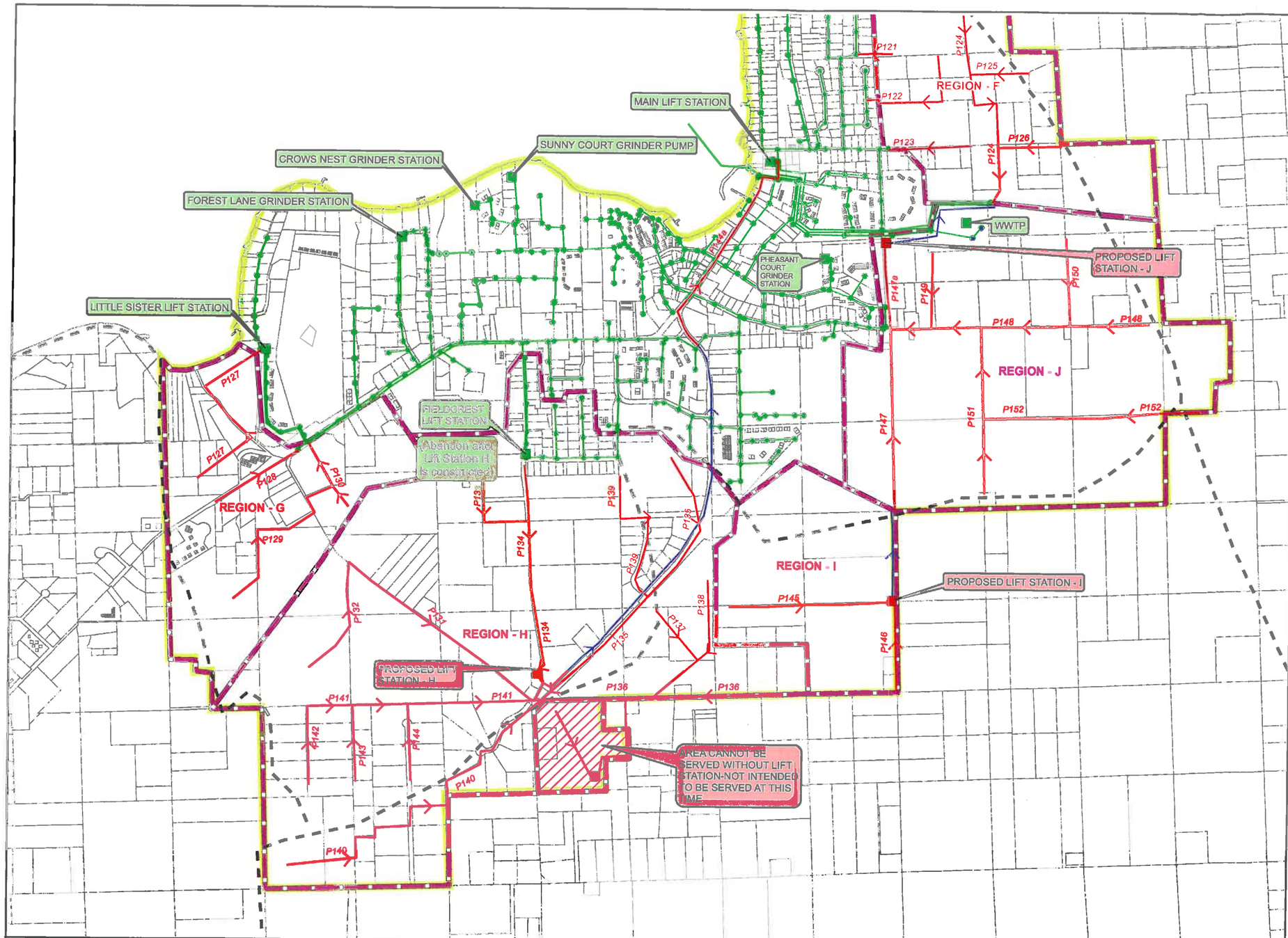

Legend

- Existing Sewer System
- Existing Lift Stations
- Proposed Forcemains
- Proposed Trunk Sewer
- Proposed Lift Stations
- Approximate Drainage Divide
- Proposed Sewer Regional Boundaries
- STUDY BOUNDARY
- Parcels
- P120 Proposed Pipe Number

Future sewer extensions are shown in natural valleys wherever possible in order to provide the maximum service by gravity to the upland areas. In areas where gravity sewer is not possible due to elevation, planned lift stations and force mains are shown to serve the low areas. In addition to topography, the routes shown for trunk sewer facilities are influenced by locations of roadways, parcel lines, and land uses.

It is important to note that the size and location of planned sewers shown on this drawing are schematics and are conceptual in nature. Detailed locations will need to be determined through feasibility studies and design development prior to construction. Typically, trunk facilities will be incorporated into future development, so the actual future locations of these facilities will be dependent on final development layouts.

N

0 750 1,500 Feet

Source:
Door County and Bay Lake RPC.
Projection:
Wisconsin State Plane
Map by:
SEH

This map is neither a legally recorded map nor a survey map and is not intended to be used as one. This map is a compilation of records, information, and data gathered from various sources and is to be used for reference purposes only. SEH does not warrant that the Geographic Information System (GIS) Data used to prepare are error free, and SEH does not represent that the GIS Data can be used for navigational, tracking, or any other purpose requiring exacting measurement of distance or direction or precision in the depiction of geographic features. If errors or discrepancies are found please contact SEH GIS Services at 651-490-2000. This user of this map acknowledges that SEH shall not be liable for any damages which arise out of the user's access or use of data provided.

SEH
425 WEST WATER STREET
SUITE 300
APPLETON, WI 54911-8058
PHONE: (920) 380-2800
FAX: (920) 380-2801
www.sehinc.com

PROJECT: ASISTB0502.00

DATE: 02/07/2007

COMPREHENSIVE UTILITIES PLAN

Village of Sister Bay

Improvements to Meet Future Needs (South)

Figure 10-3

Map Document: (S:\PT\S\Sistb\050200\GIS\SanitaryModel\Fig10-3_Improvements_to_Meet_Future_Needs_South.mxd)
4/9/2008 -- 2:19:31 PM

2020 General Plan Design

Village of Sister Bay

Door County, Wisconsin

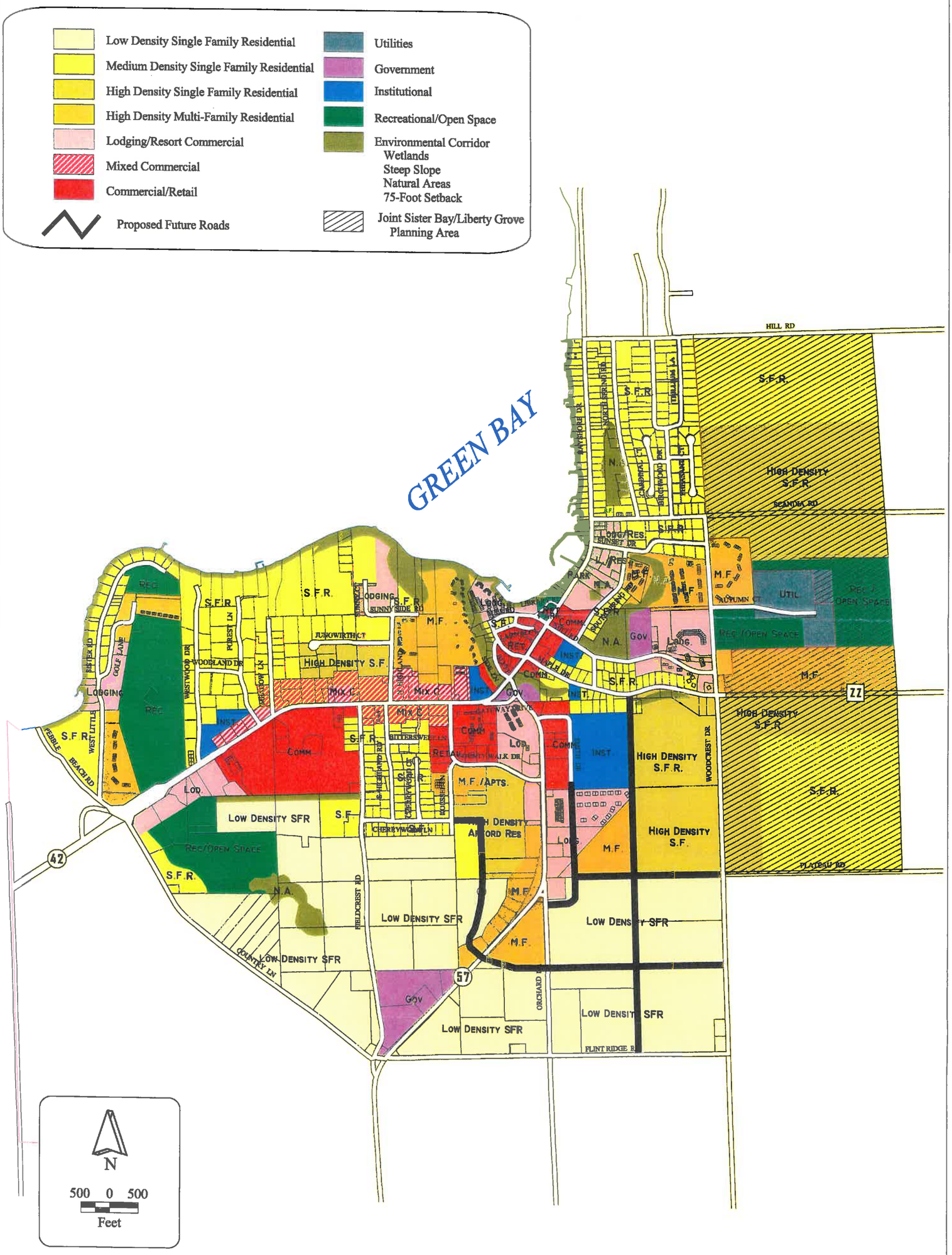

N

500 0 500

Feet

This map is neither a legally recorded map nor a survey and is not intended to be used as one. This drawing is a compilation of records, information and data used for reference purposes only. Bay-Lake RPC is not responsible for any inaccuracies herein contained.

Source: Bay-Lake Regional Planning Commission, 2003.

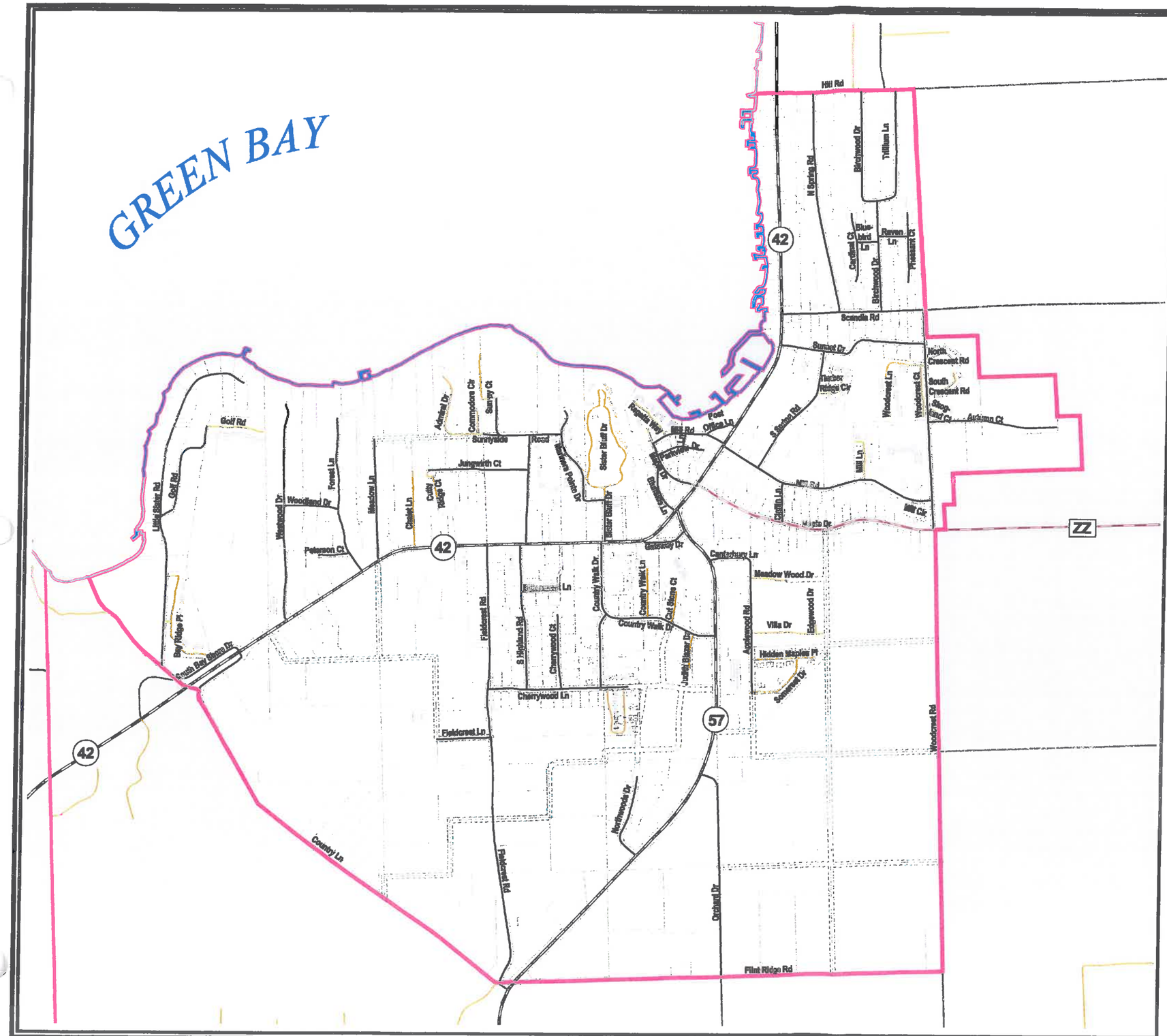

Official Map
of the
Village of Sister Bay
Door County, Wisconsin
Last Updated: May 14, 2013

STATE HIGHWAY
COUNTY ROAD
TOWN ROAD
VILLAGE STREET
PRIVATE ROAD
PROPOSED RIGHT-OF-WAY

Village Boundary
Parcel Boundaries

N
W E
S

1000 0 1000 Feet

1" = 1200'

Map created for the Village of Sister Bay
by Door County Planning Department:

421 Nebraska Street
Sturgeon Bay WI 54235
920-746-2323

VILLAGE OF SISTER BAY
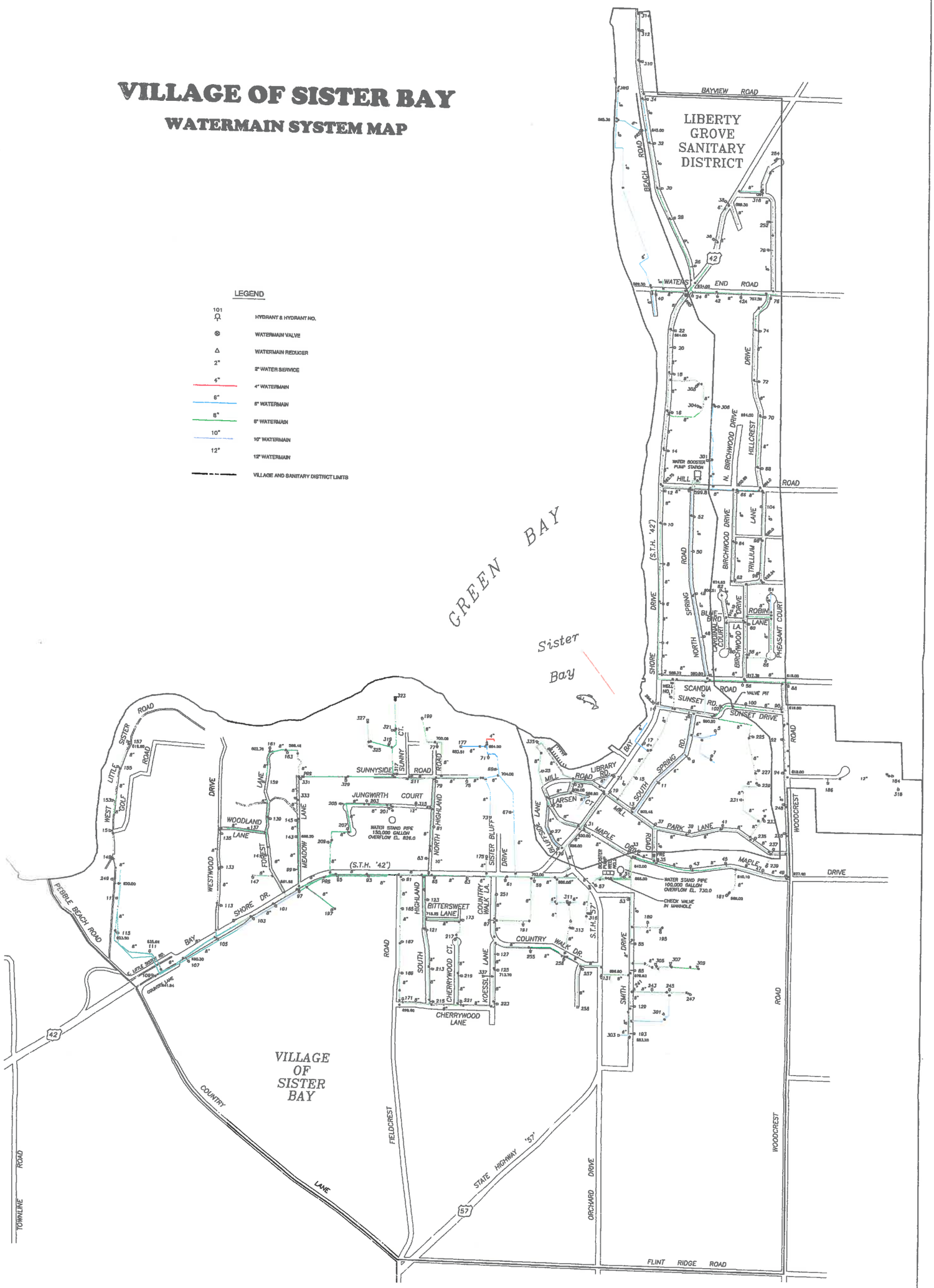
WATERMAIN SYSTEM MAP