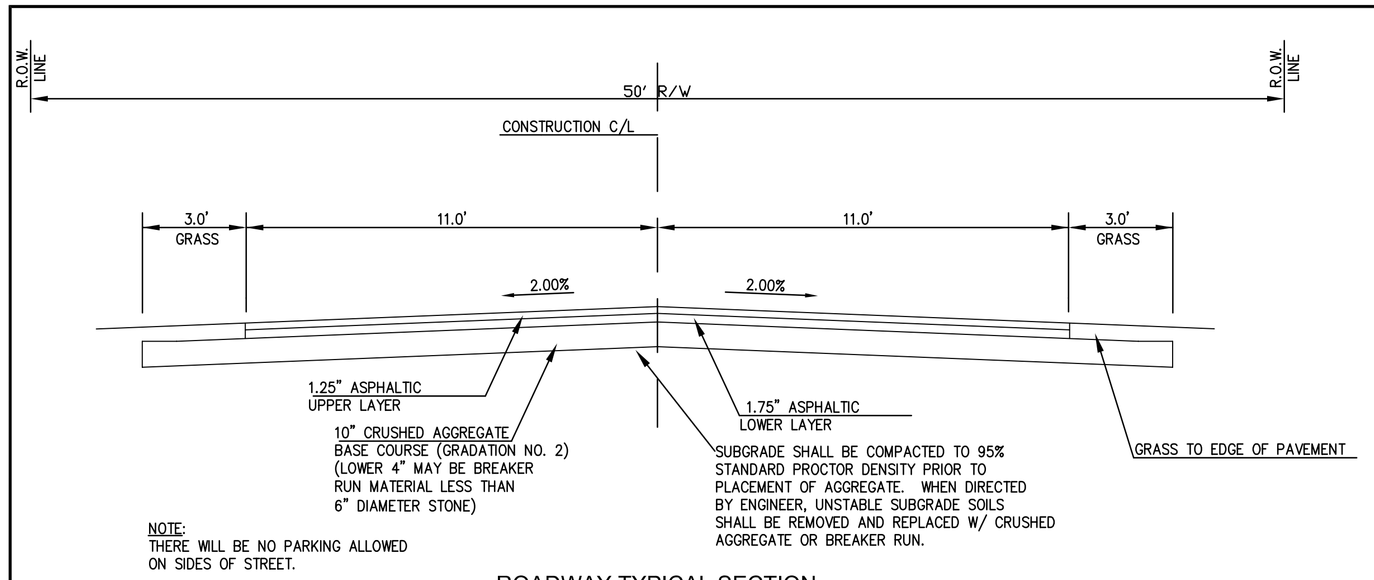

NOTE:
THERE WILL BE NO PARKING ALLOWED ON SIDES OF STREET.

ROADWAY TYPICAL SECTION

MARINER'S VIEW STATION 12+50 TO 23+60.96

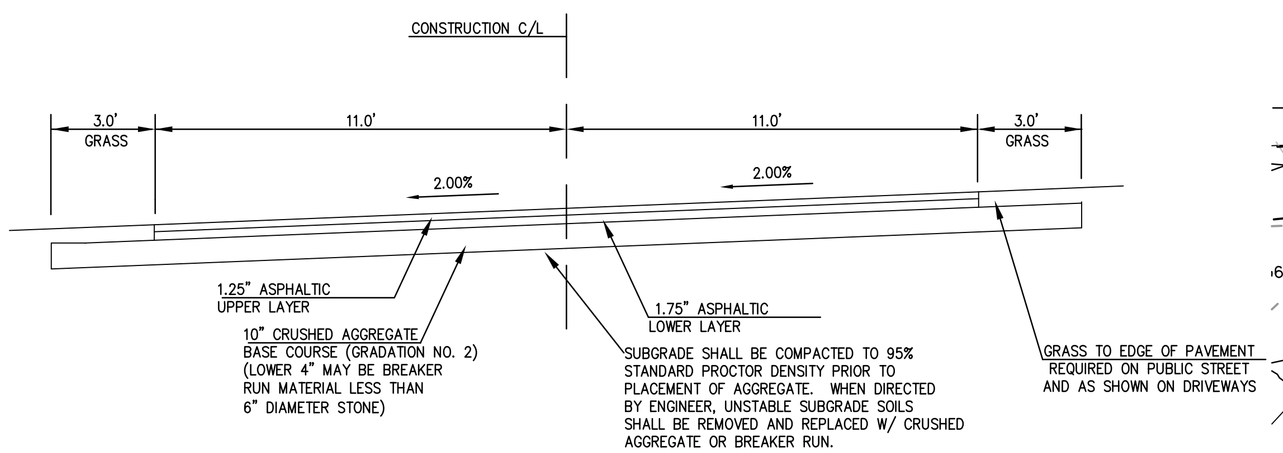

DRIVEWAY TYPICAL SECTION

MARINER'S VIEW STATION 10+00 TO 12+00
EAST DRIVE STATION 32+92 TO 36+62.02
WEST DRIVE STATION 42+75.5 TO 45+62.68

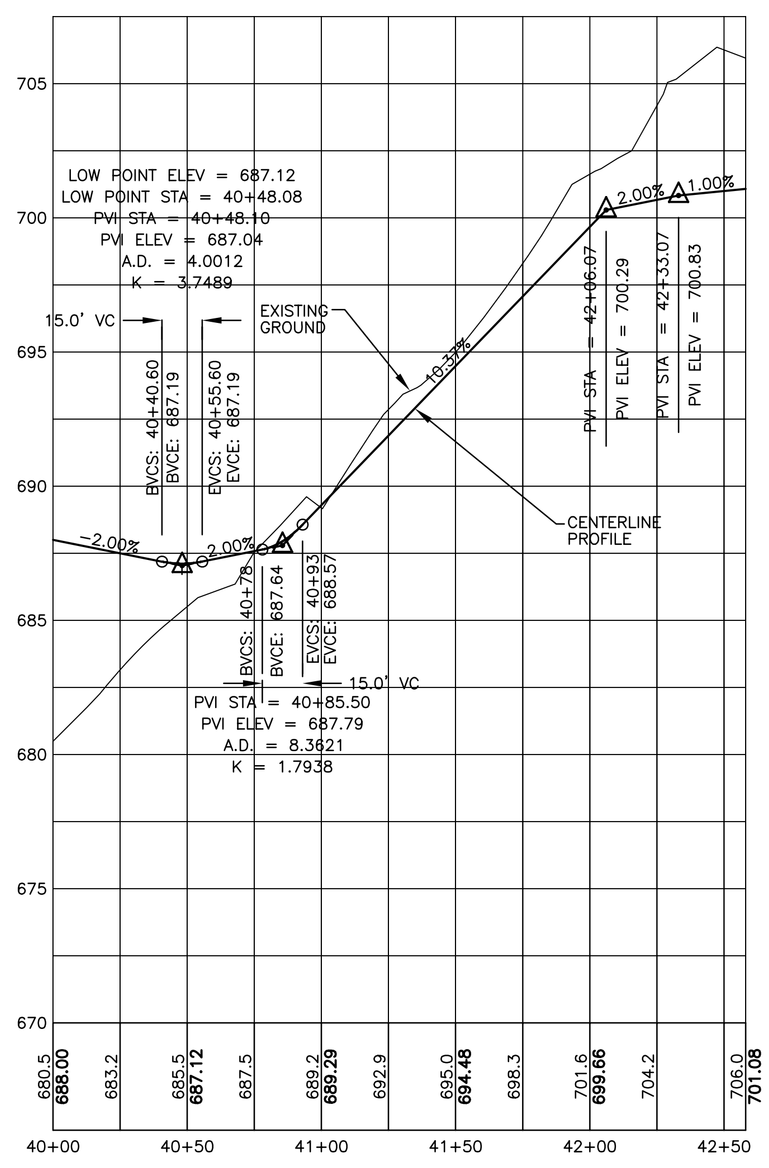

WEST DRIVEWAY

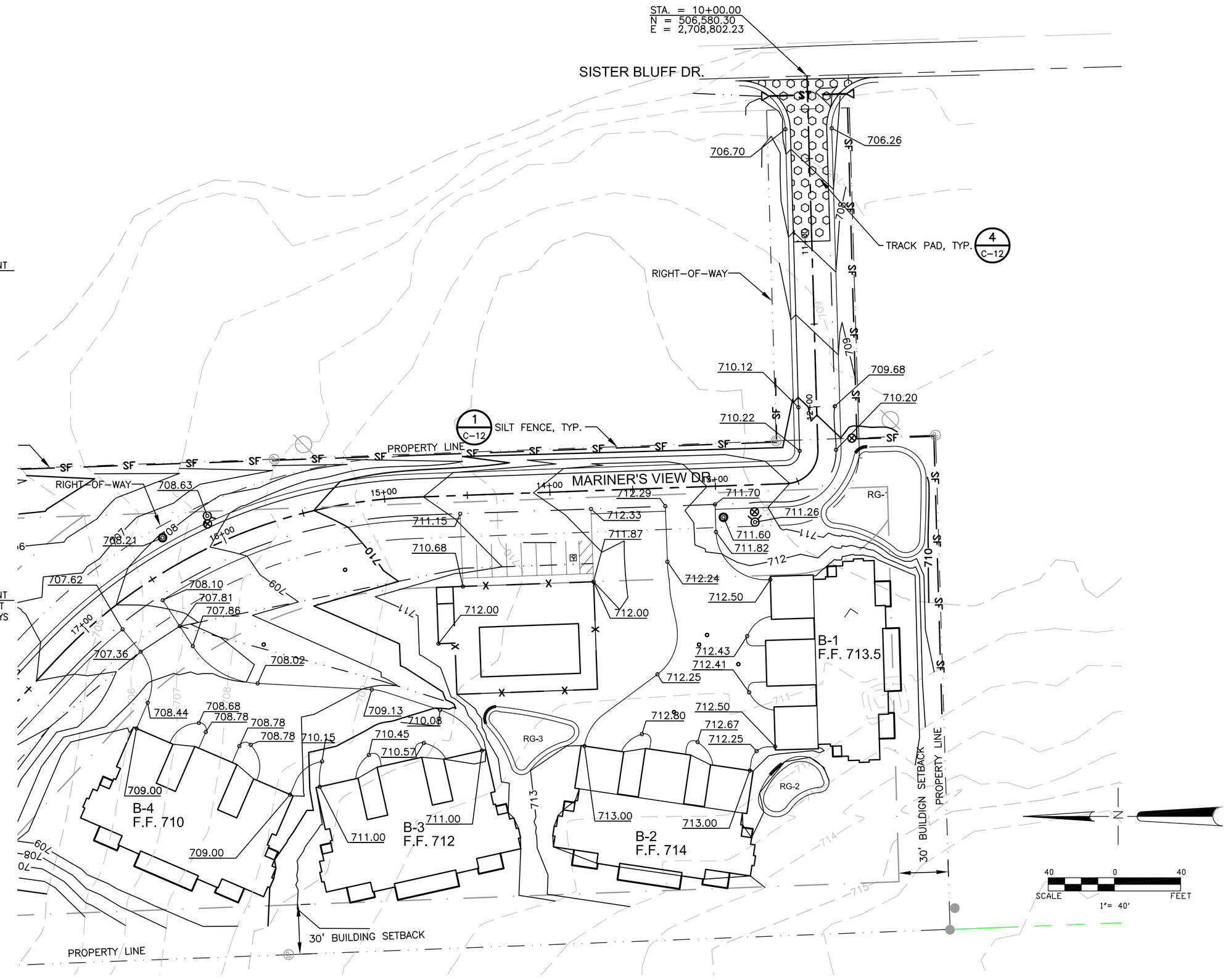

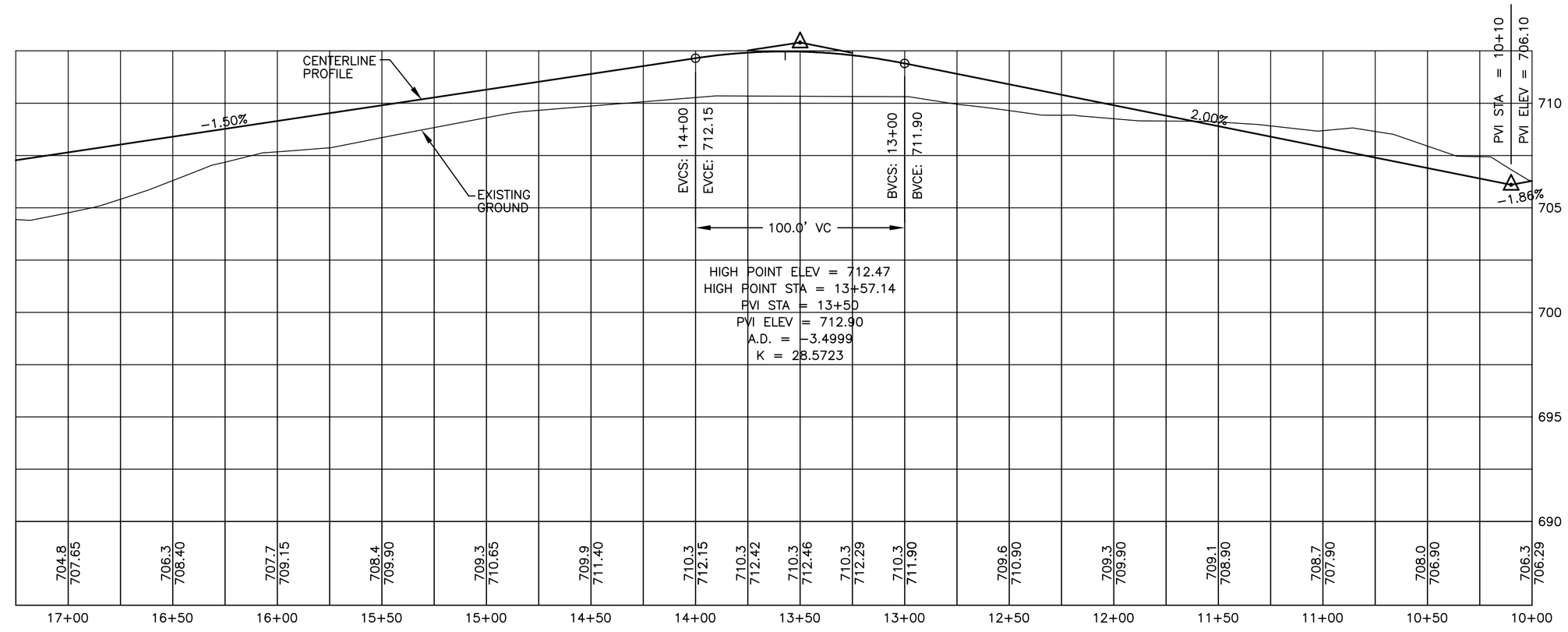

MARINER'S VIEW

STS CONSULTANTS
1035 Kepler Drive
Green Bay, WI 54311
920-468-1978
www.stsconsultants.com

Copyright 2005 ©
By: STS Consultants, Ltd.

NAI-MLG DEVELOPMENT
13400 BISHOP'S LANE
SUITE 100
BROOKFIELD, WI 53005

EROSION CONTROL &
GRADING PLAN
MARINER'S VIEW
CONDOMINIUM DEVELOPMENT
SISTER BAY, WI

Issued

Rev	Date	Description
4	11/30/2005	Addendum #2
3	11/23/2005	Addendum #1
2	11/8/2005	ISSUED FOR BIDDING
1	10/31/2005	ISSUED FOR SITE PLAN REVIEW

Designed: NAG 10/10/2005
Drawn:
Checked:
Approved:

PROJECT NUMBER
429507A

SHEET REFERENCE NUMBER
C-03

X:\PROJECTS\429507A\Dwg\G429507A_C0.dwg: 12/8/2005 9:51:08 AM: GRAHAM, NANCY