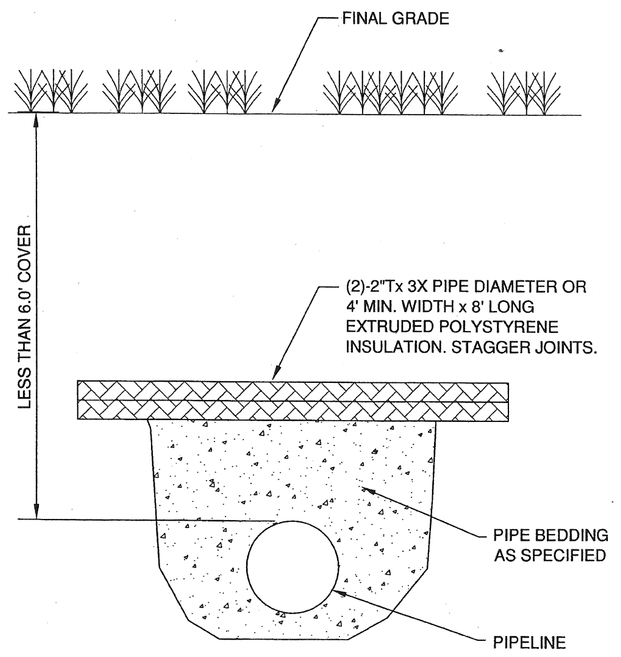

PIPE INSULATION DETAIL

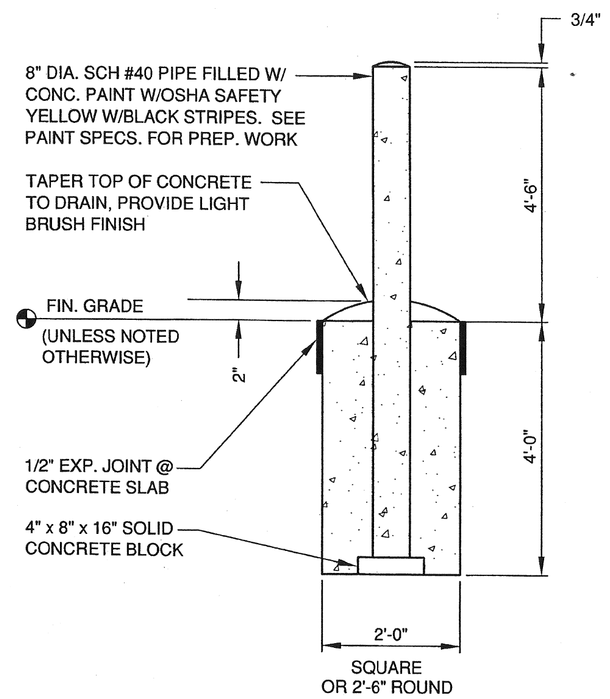

TYPICAL GUARD POST

17 / C112 PIPE INSULATION DETAIL

NOT TO SCALE

18 / C112 TYPICAL GUARD POST

NOT TO SCALE

SISTER BAY SPORTS COMPLEX

Owner:

VILLAGE OF
SISTER BAY, WI

JJR landscape architecture planning urban design civil engineering environmental science

JJR, LLC
625 WILLIAMSON STREET,
MADISON, WISCONSIN 53703
608.251.1177 T
608.251.6147 F
www.jjr-us.com

ISSUED FOR	REV	DATE
Design Development Progress Set		3/20/08
95% Review Plan Set		6/5/08

SEALS AND SIGNATURES

NOT FOR CONSTRUCTION

KEY PLAN

PROJECT NORTH

DRAWING TITLE

UTILITY DETAILS

SCALE

PROJECT NUMBER 24684.001

DRAWING NUMBER C112

FILE:P:\24684\001\CAD\sheet\24684-SH-DET-UTILITIES-SCAN.dwg USER:hellford DATE:Jun. 18 2008 TIME: 10:17 am