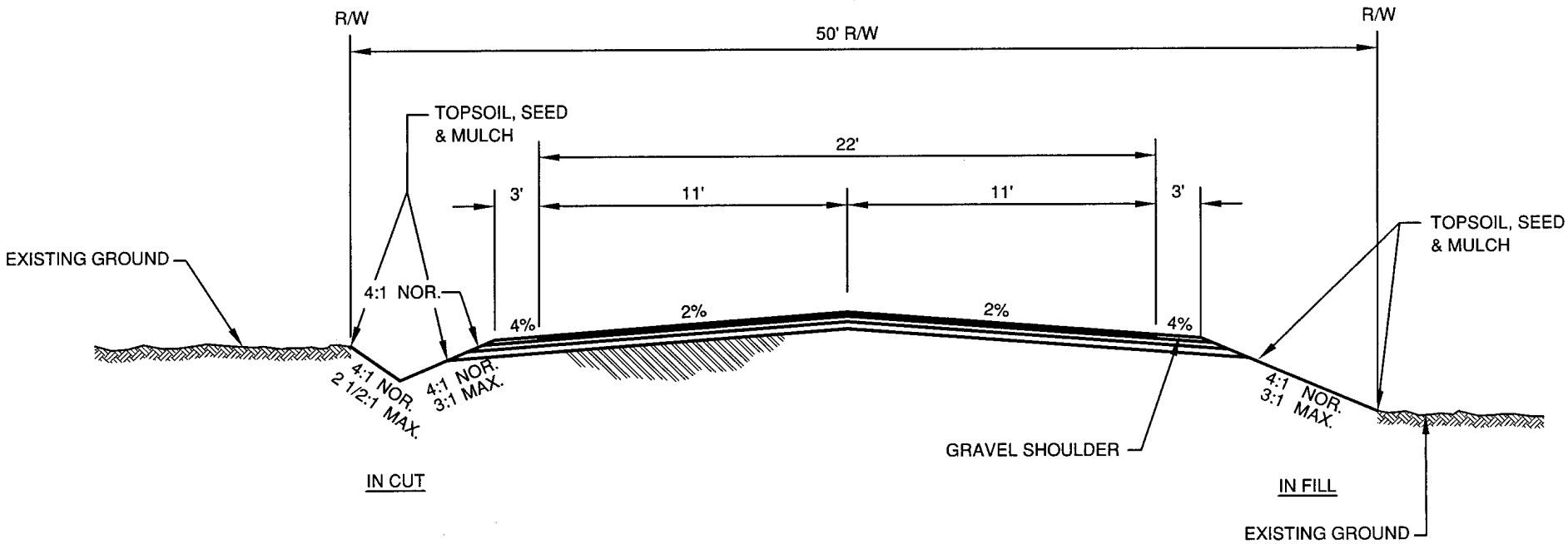

TYPICAL NEIGHBORHOOD STREET CROSS SECTION (NO PARKING)

NOTES: DEPENDING ON NUMBER OF DRIVEWAYS AND DENSITY OF ABUTTING PROPERTIES, AN ADDITIONAL TWO FEET OF PAVEMENT MAY BE REQUIRED ON SHOULDERS.

ROADWAY AND UTILITY CONSTRUCTION SHOULD BE COORDINATED WITH THE VILLAGE IN AN ATTEMPT TO MAINTAIN EXISTING TREES WITHIN THE RIGHT OF WAY.

R:\0200\0282\0282050\dwg\TYP_SECTION.dwg

CROSS SECTION NO. 1

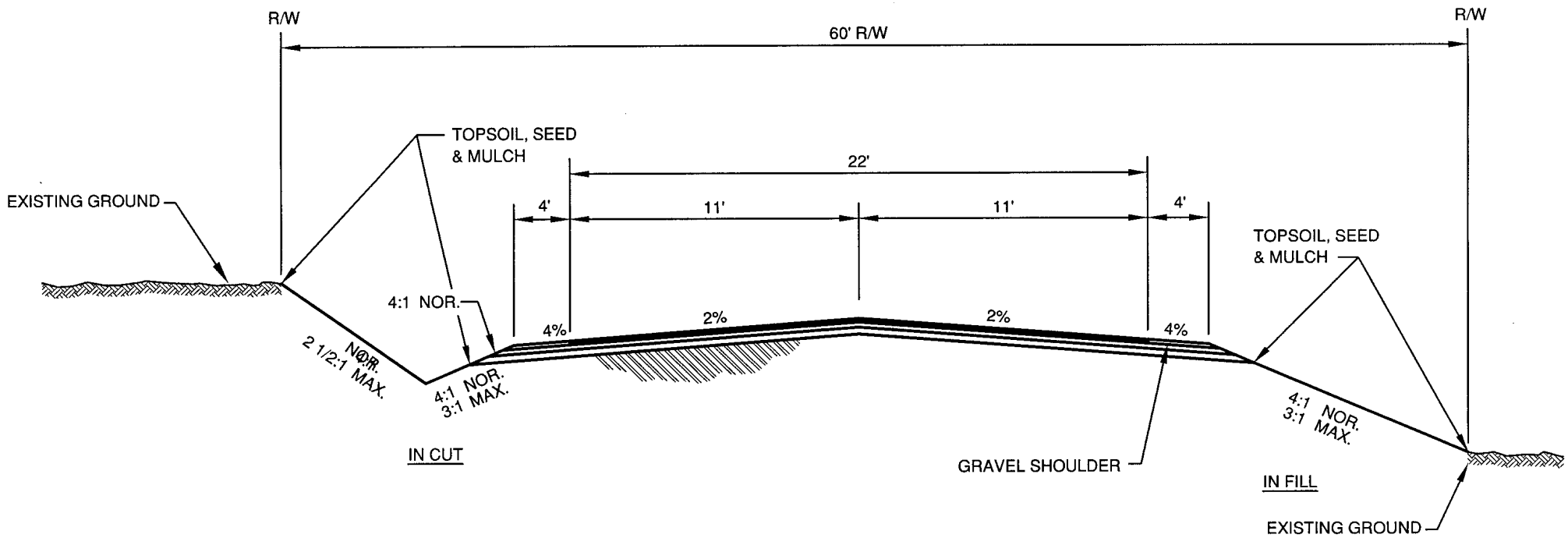

TYPICAL NEIGHBORHOOD/ARTERIAL STREET CROSS SECTION (NO PARKING)

NOTES: DEPENDING ON NUMBER OF DRIVEWAYS AND DENSITY OF ABUTTING PROPERTIES, AN ADDITIONAL TWO FEET OF PAVEMENT MAY BE REQUIRED ON SHOULDERS.

ROADWAY AND UTILITY CONSTRUCTION SHOULD BE COORDINATED WITH THE VILLAGE IN AN ATTEMPT TO MAINTAIN EXISTING TREES WITHIN THE RIGHT OF WAY.

R:\0200\0282\0282050\dwg\TYP_SECTION.dwg

CROSS SECTION NO. 2

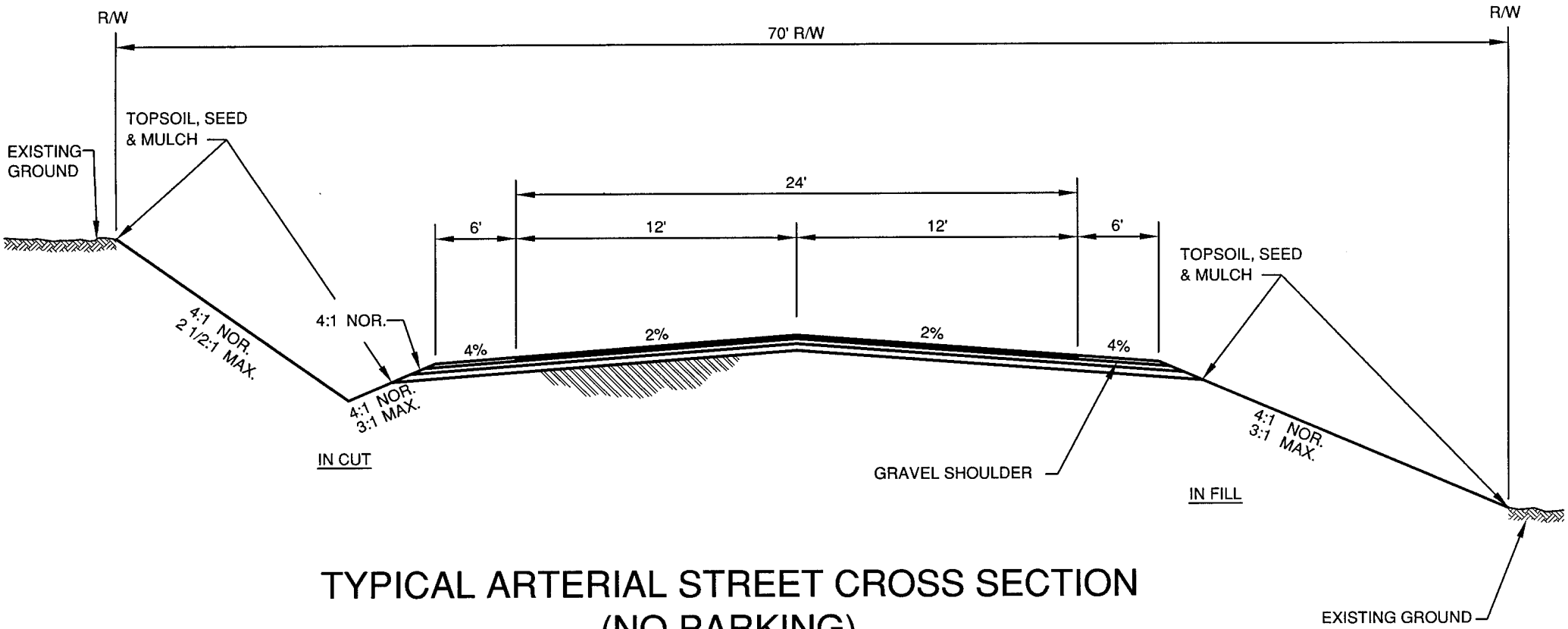

TYPICAL ARTERIAL STREET CROSS SECTION (NO PARKING)

NOTES: DEPENDING ON NUMBER OF DRIVEWAYS AND DENSITY OF ABUTTING PROPERTIES, AN ADDITIONAL TWO FEET OF PAVEMENT MAY BE REQUIRED ON SHOULDERS.

ROADWAY AND UTILITY CONSTRUCTION SHOULD BE COORDINATED WITH THE VILLAGE IN AN ATTEMPT TO MAINTAIN EXISTING TREES WITHIN THE RIGHT OF WAY.

R:\0200\0282\0282050\dwg\TYP_SECTION.dwg

CROSS SECTION NO. 3

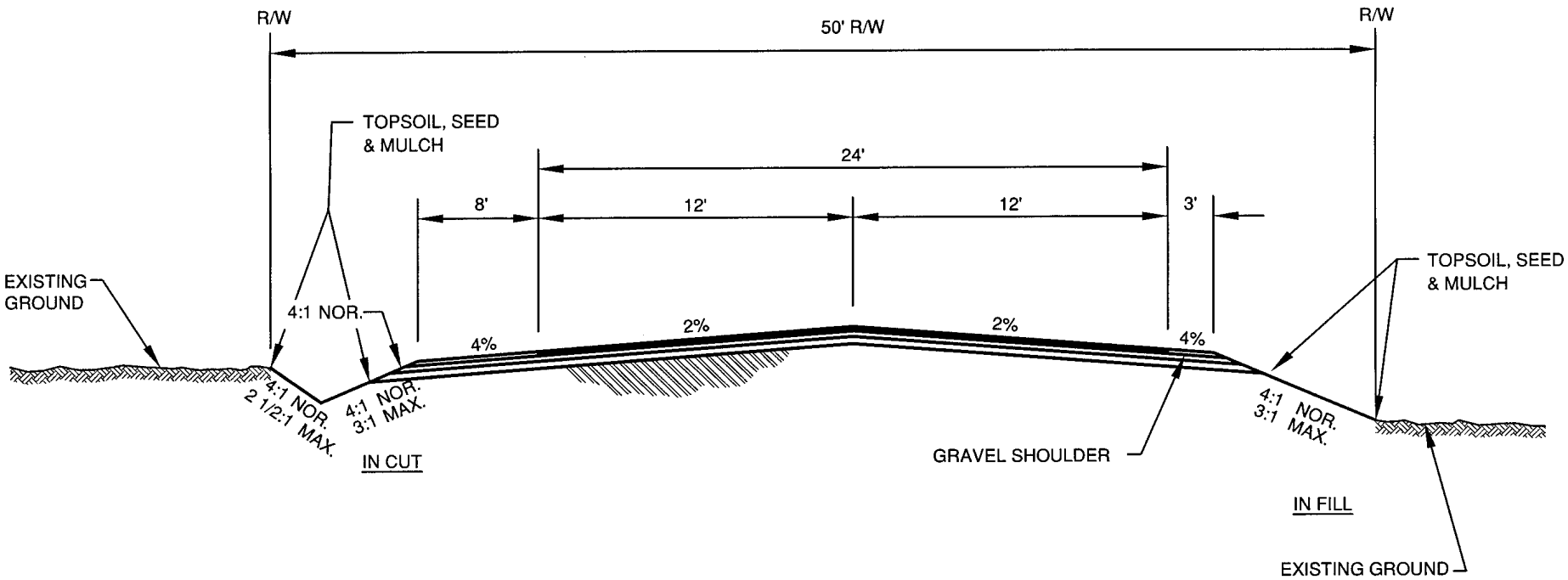

TYPICAL NEIGHBORHOOD STREET CROSS SECTION (PARKING 1 SIDE ONLY)

NOTES: DEPENDING ON NUMBER OF DRIVEWAYS AND DENSITY OF ABUTTING PROPERTIES, AN ADDITIONAL TWO FEET OF PAVEMENT MAY BE REQUIRED ON SHOULDERS.

ROADWAY AND UTILITY CONSTRUCTION SHOULD BE COORDINATED WITH THE VILLAGE IN AN ATTEMPT TO MAINTAIN EXISTING TREES WITHIN THE RIGHT OF WAY.

R:\0200\0282\0282050\dwg\TYP_SECTION.dwg

CROSS SECTION NO. 4

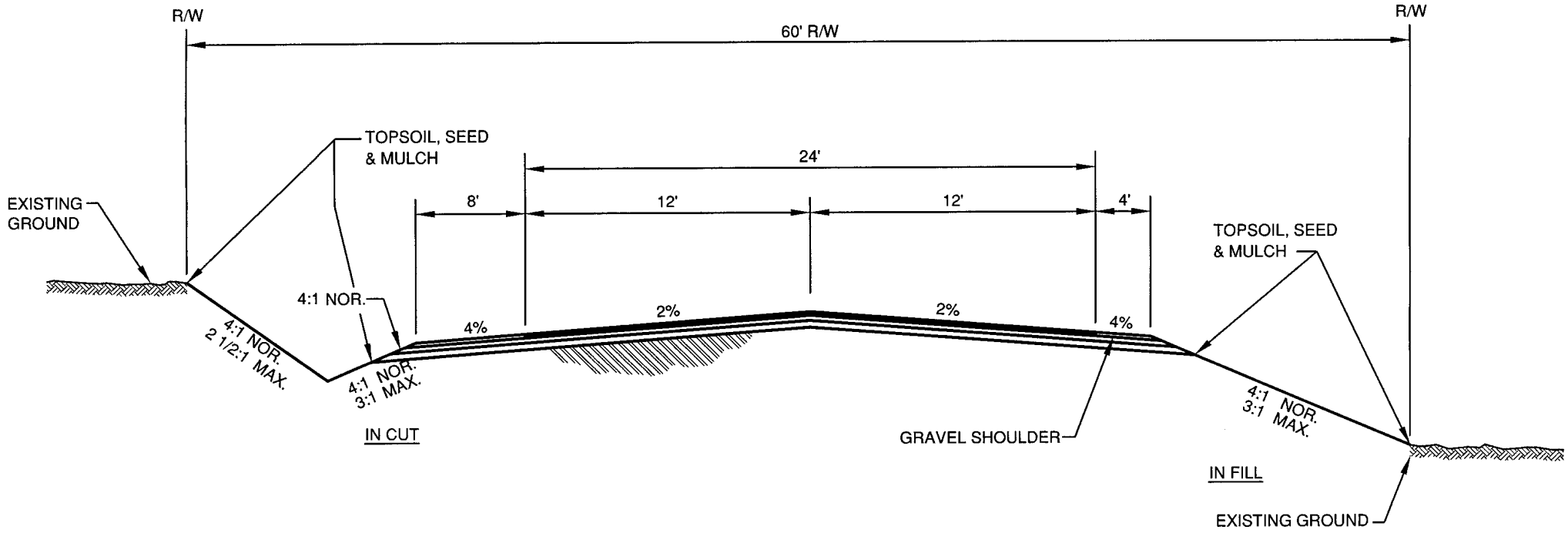

TYPICAL NEIGHBORHOOD/ARTERIAL STREET CROSS SECTION (PARKING 1 SIDE ONLY)

NOTES: DEPENDING ON NUMBER OF DRIVEWAYS AND DENSITY OF ABUTTING PROPERTIES, AN ADDITIONAL TWO FEET OF PAVEMENT MAY BE REQUIRED ON SHOULDERS.

ROADWAY AND UTILITY CONSTRUCTION SHOULD BE COORDINATED WITH THE VILLAGE IN AN ATTEMPT TO MAINTAIN EXISTING TREES WITHIN THE RIGHT OF WAY.

R:\0200\0282\0282050\dwg\TYP_SECTION.dwg

CROSS SECTION NO. 5

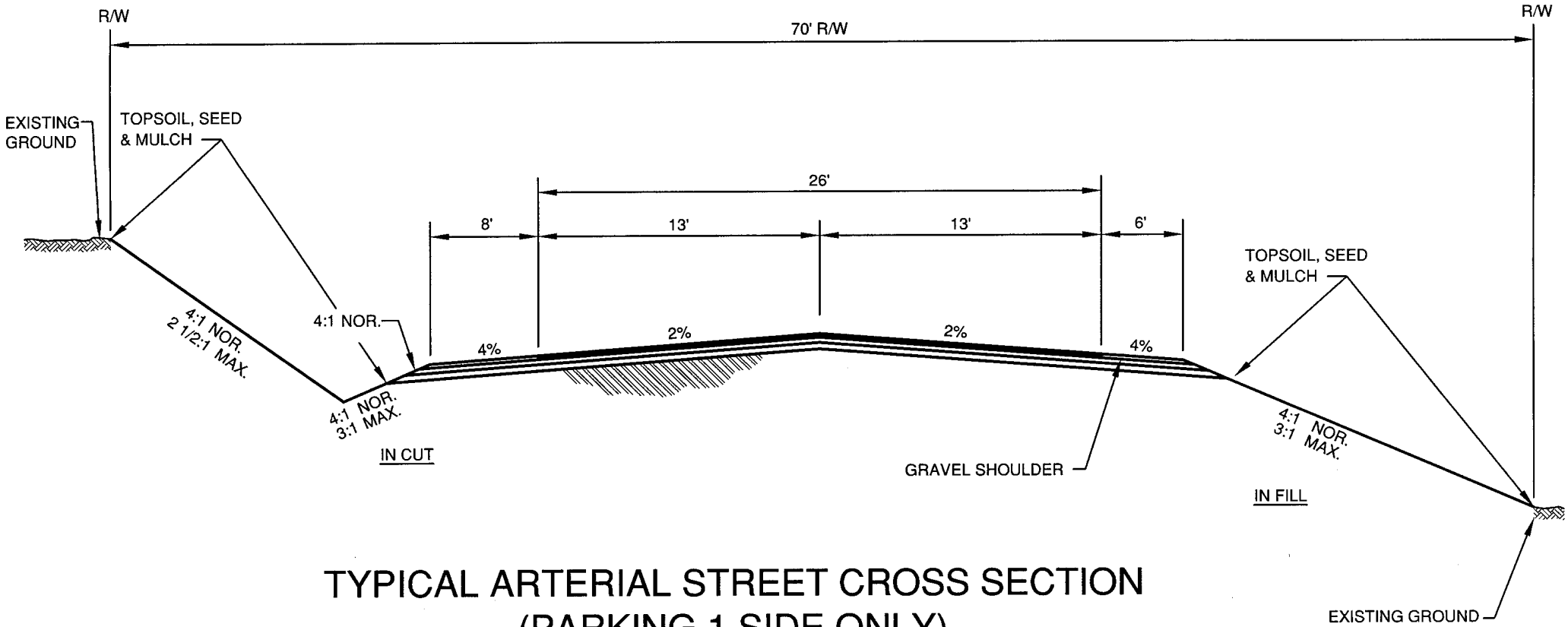

TYPICAL ARTERIAL STREET CROSS SECTION (PARKING 1 SIDE ONLY)

NOTES: DEPENDING ON NUMBER OF DRIVEWAYS AND DENSITY OF ABUTTING PROPERTIES, AN ADDITIONAL TWO FEET OF PAVEMENT MAY BE REQUIRED ON SHOULDERS.

ROADWAY AND UTILITY CONSTRUCTION SHOULD BE COORDINATED WITH THE VILLAGE IN AN ATTEMPT TO MAINTAIN EXISTING TREES WITHIN THE RIGHT OF WAY.

R:\0200\0282\0282050\dwg\TYP_SECTION.dwg

CROSS SECTION NO. 6

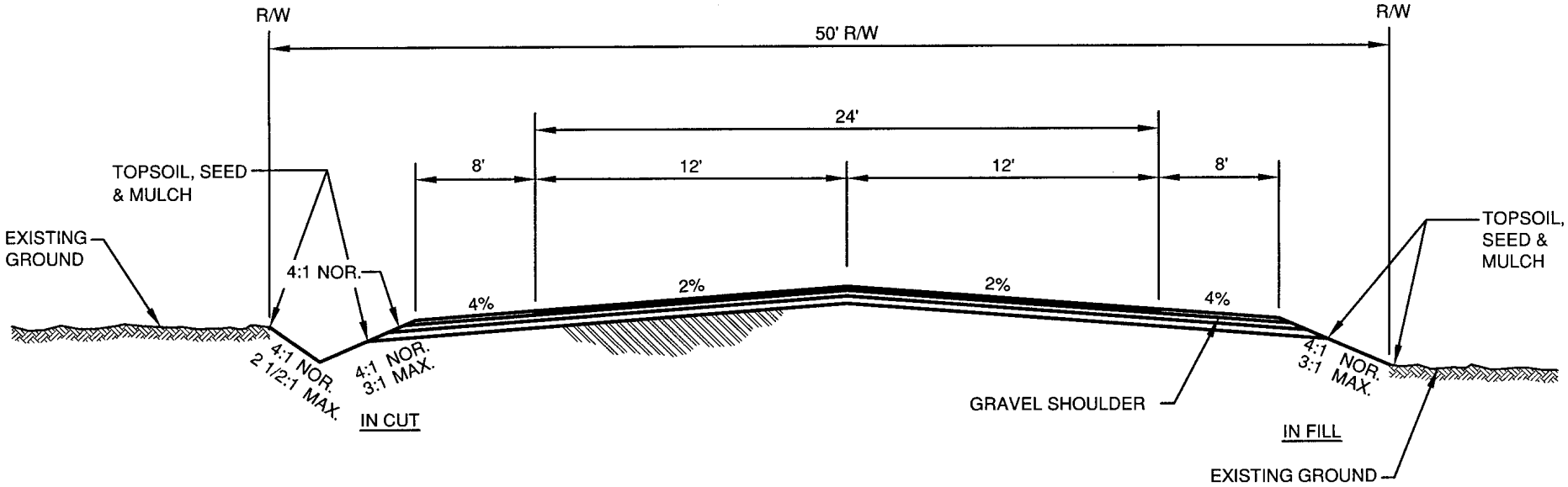

TYPICAL NEIGHBORHOOD STREET CROSS SECTION (PARKING 2 SIDES)

NOTES: DEPENDING ON NUMBER OF DRIVEWAYS AND DENSITY OF ABUTTING PROPERTIES, AN ADDITIONAL TWO FEET OF PAVEMENT MAY BE REQUIRED ON SHOULDERS.

ROADWAY AND UTILITY CONSTRUCTION SHOULD BE COORDINATED WITH THE VILLAGE IN AN ATTEMPT TO MAINTAIN EXISTING TREES WITHIN THE RIGHT OF WAY.

R:\0200\0282\0282050\dwg\TYP_SECTION.dwg

CROSS SECTION NO. 7

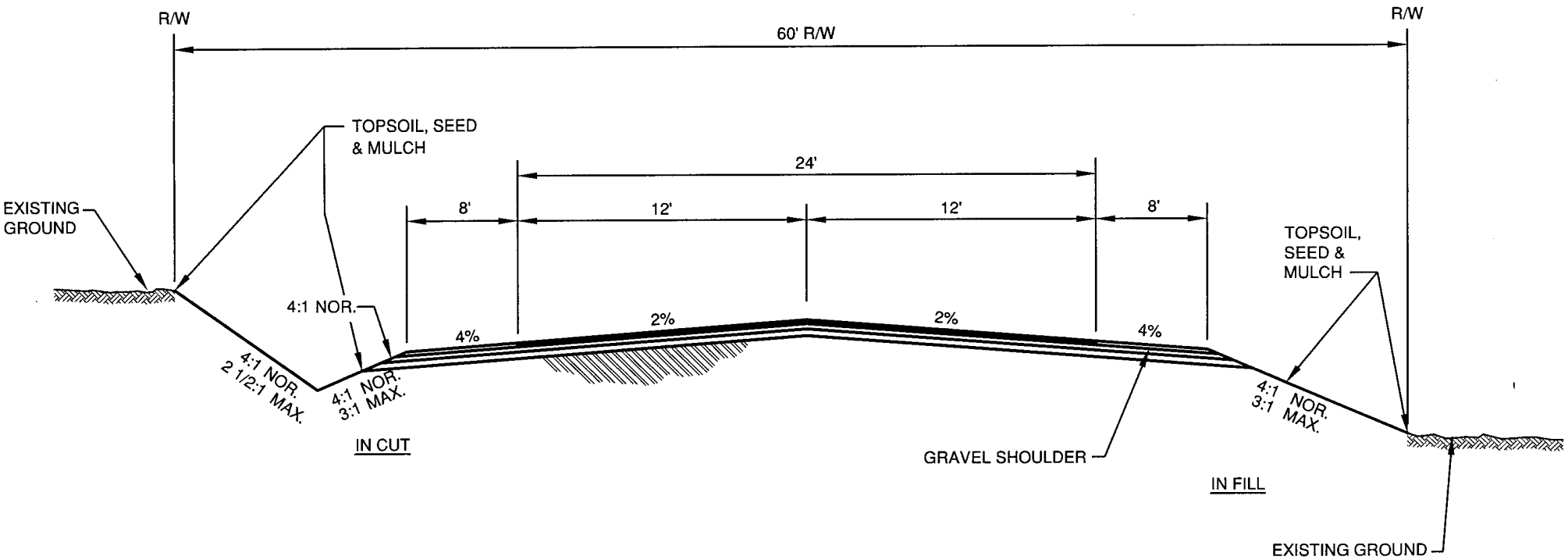

TYPICAL NEIGHBORHOOD/ARTERIAL STREET CROSS SECTION (PARKING 2 SIDES)

NOTES: DEPENDING ON NUMBER OF DRIVEWAYS AND DENSITY OF ABUTTING PROPERTIES, AN ADDITIONAL TWO FEET OF PAVEMENT MAY BE REQUIRED ON SHOULDERS.

ROADWAY AND UTILITY CONSTRUCTION SHOULD BE COORDINATED WITH THE VILLAGE IN AN ATTEMPT TO MAINTAIN EXISTING TREES WITHIN THE RIGHT OF WAY.

R:\0200\0282\0282050\dwg\TYP_SECTION.dwg

CROSS SECTION NO. 8

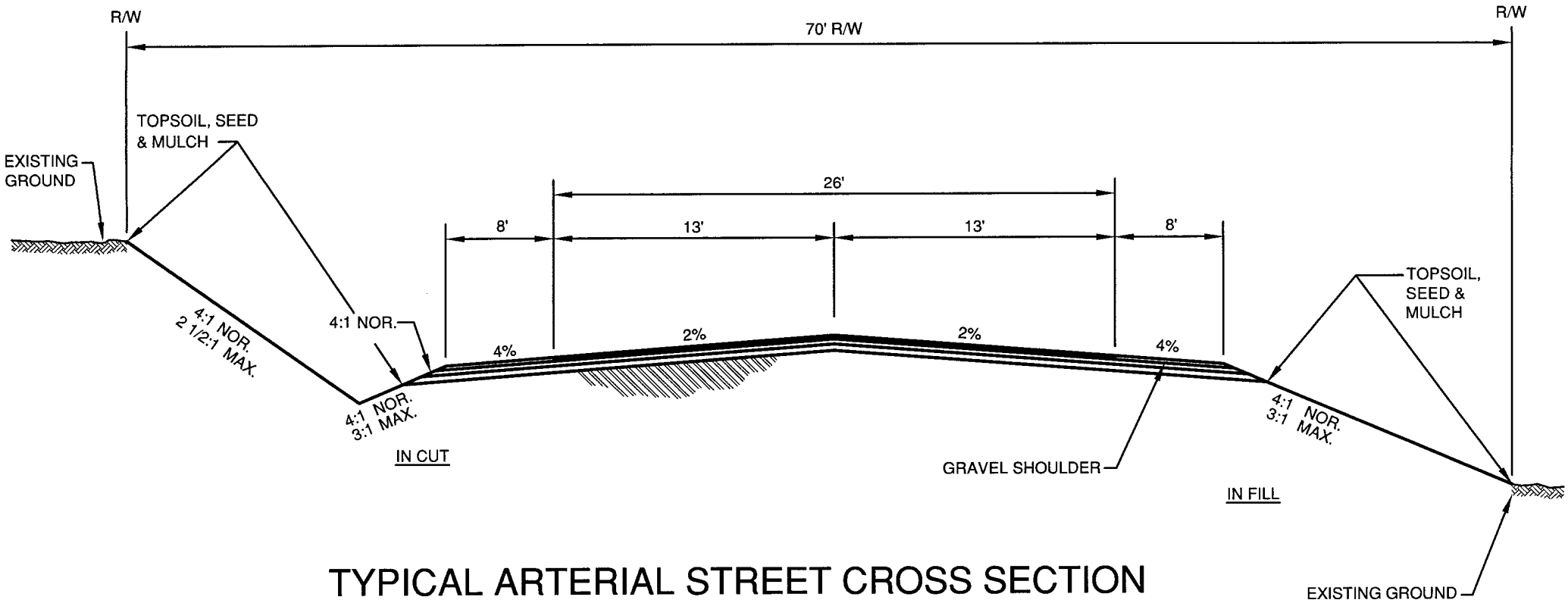

TYPICAL ARTERIAL STREET CROSS SECTION (PARKING 2 SIDES)

NOTES: DEPENDING ON NUMBER OF DRIVEWAYS AND DENSITY OF ABUTTING PROPERTIES, AN ADDITIONAL TWO FEET OF PAVEMENT MAY BE REQUIRED ON SHOULDERS.

ROADWAY AND UTILITY CONSTRUCTION SHOULD BE COORDINATED WITH THE VILLAGE IN AN ATTEMPT TO MAINTAIN EXISTING TREES WITHIN THE RIGHT OF WAY.

R:\0200\0282\0282050\dwg\TYP_SECTION.dwg

CROSS SECTION NO. 9